Advanced Platform Technology (APT) Center
Louis Stokes Cleveland
Department of Veterans Affairs Medical Center (LSCDVAMC)

APT CENTER

TECHNICAL FOUNDATIONS
FOR CLINICAL INNOVATIONS

A VA Research Center of Excellence

ANNUAL REPORT
For activities during the period: January 1, 2006 – December 31, 2006

Annual Report
January 1, 2006 – December 30, 2006
Cleveland Advanced Platform Technology Center
Louis Stokes Cleveland Department of Veterans Affairs Medical Center

TABLE OF CONTENTS

A. SUMMARY OF YEAR 3
1. Mission of the Cleveland APT Center 3
2. Stated Goals and Objectives Achieved 4
3. Future Goals and Objectives 14
4. Plan adjustments 14

B. PROJECT REPORTS 15
1. Project Submissions/Approvals (VA, Other Federal, and Private Funding) 15
2. Ongoing Funded Projects (VA, Other Federal, and Private Funding) 18
3. Project Progress Notes 19
4. Project Milestones 51

C. CAPACITY BUILDING 51
1. Current APT Center Staff 51
2. OOA Pre-Doctoral Fellows 52
3. Career Development Awardees 52
4. Research Career Scientists 53
5. Other Research Fellow Programs 53
6. Advisory Board Members 55

D. INFORMATION DISSEMINATION 55
1. Presentations 55
2. Publications Published or Accepted for Publication 60
3. Publications Under Review or in Revision 62
4. Sponsored Conferences and Workshops 65
5. Transferred (Commercialized/Patented Technology) 66
6. Community Activities 66
7. Other information Dissemination Activities 67

E. RESEARCH COLLABORATIONS 68
1. Summary of Clinical Interface 68
2. Active Collaborations 69

A. SUMMARY OF YEAR

1. Mission of the Cleveland APT Center

Mission: *The Cleveland APT Center will develop advanced technologies that serve the clinical needs of veterans with motor and sensory deficits and limb loss to provide clinician-researchers within the Department of Veterans Affairs (VA) with new tools for rehabilitation, treatment and scientific inquiry that lead to independence and enhanced societal participation. We will accomplish this by collaborating with leading academic, industrial and clinical partners within and outside the VA system. The Cleveland APT Center will be a national leader in creating and delivering innovative products based on cutting edge technologies and a catalyst for the discovery and development of new technologies and techniques that can be employed in the rehabilitation process to provide independence for veterans and other individuals with disabilities.*

The primary strategy of the Cleveland APT Center is to bring the clinical needs of veterans to the attention of the engineers and scientists pursuing new and emerging technologies in order to apply them for the purposes of reducing disability, improving daily function and enhancing quality of life. Our approach is based on the fundamental assumption that there is considerable untapped potential in new technologies that could be brought to bear on solving the pressing, real world clinical needs of disabled veterans. In many cases, these technologies are being developed for non-medical purposes and their potential in rehabilitation has not yet been appreciated.

The purpose of the Center is to identify high priority rehabilitation needs and then match them with potential technological solutions. We will systematically gather, organize and analyze the needs of clinicians and potential consumers of assistive technologies before evaluating the portfolio of technologies at our disposal to see if possible solutions exist. Therefore, it is important that the Center maintain a broad base of collaborators in the various engineering and scientific disciplines. Where no potential matches between emerging technologies and clinical needs exist, the interactive process will facilitate the exploration of new approaches, techniques and technologies that might not otherwise have existed or been apparent.

It is critical to the mission of the Center that the platform technologies identified and developed become readily available to the veteran and accessible to clinician-scientists within the VA Healthcare System. Therefore, prototype devices and new technologies need to be developed in a manner that is consistent with the production and commercialization of medical-grade products. The Cleveland APT Center is organized to ensure that the technologies that result from our efforts are suitable for regulatory approval, are manufacturable and producible, and can be broadly disseminated. Our goals will be accomplished by performing design and prototype functions under structured quality control systems so that large-scale production can be outsourced to contract fabrication facilities or transferred directly to commercial partners.

2. Stated Goals and Objectives Achieved

Goals: The overall goals of the Cleveland APT Center are to:

1. Create an environment where the pressing clinical needs of clinicians and veterans with motor and sensory dysfunction and limb loss can be coherently represented to engineers and scientists developing advanced technology
2. Foster multidisciplinary interactions between clinician-scientists and device designers in order to find creative solutions to real-world rehabilitation issues
3. Design deployable and manufacturable rehabilitation products that address the unmet needs of veterans with disabilities
4. Facilitate production of new rehabilitation technologies for a wide variety of applications
5. Ensure access to the resulting rehabilitation products and disseminate them throughout the VA Healthcare System
6. Protect intellectual property and enable technology transfer to commercial manufacturers
7. Provide training opportunities for clinicians in rehabilitation engineering and technologists in rehabilitation science related to advanced technology
8. Support rehabilitation research at other Centers of Excellence by adapting the foundational technical platforms to meet their specific needs for advanced prosthetic systems and sensory aids

This section reports on the progress toward these goals completed in 2006. Center objectives established at the beginning of the reporting period are identified, followed by specific accomplishments and progress toward achieving them.

Objective 1: Establish an APT Center governing board and convene at least one meeting of this advisory panel.

Progress and Accomplishments:

- **Convened Two Stakeholder Meetings**

  Two VA stakeholder meetings were convened where APT Center accomplishments and future plans were presented. Insightful discussion and feedback occurred in regards to the following topics: our project efforts and their clinical relevance, space planning, and research versus clinical obligations. There was also discussion regarding the structure of the advisory board. A decision was made to divide the board into stakeholder meetings and an external advisory committee. Recruitment for both of these groups is underway.

- **Gathered Feedback from External Partners**

  External partners (clinical, scientific, and industry experts) from eight states attended our clinical needs assessment and engaged in visionary discussion about future research directions. Further information on this event is provided in **Section B.3 Project Reports.**

Objective 2: Complete facility renovations at the Louis Stokes Cleveland Department of Veterans Affairs Medical Center for APT Center activities (LSCDVAMC) and the Technical Development Laboratory (TDL).

Progress and Accomplishments:

- **Renovated Dedicated APT Center Space at the LSCDVAMC**

  We have completed renovation of 1,225 square feet of space at the Louis Stokes Cleveland Department of Veterans Affairs Medical Center to serve as the central administrative offices for the APT Center. Working space for five investigators and four full-time APT Center staff is in full use.

Figure 1: APT Center Entrance.

- **Secured Additional Space at the LSCDVAMC**

  1,754 additional square feet were allocated to the APT Center. Part of this space is being used as a shared laboratory for head/neck, prosthetics, and robotics research. Another laboratory area is being used for tissue culture and other wet lab processes. The remaining space is being used for APT Program Support Information Technology (IT) personnel and IT workroom/storage functions. In addition, we are in conversation with the research service regarding additional wet laboratory space.

- **Positioned Technical Development Laboratory (TDL) Renovation for 2007**

  Staff shortages in the VA purchasing department created a barrier to completing TDL renovations in 2006. All issues have been resolved and completion of this project is scheduled for Summer 2007 to reduce costs related to storage and minimize interruption during peak performance times. In the mean time, all APT Center personnel requiring TDL access have been accommodated and the facility remains fully functional.

Objective 3: Build capacity by submitting at least one associate investigator or career development award application for APT Center junior faculty.

Progress and Accomplishments:

- **Associate Investigator Awarded**

  Dr. Jeffrey Capadona was awarded an Associate Investigator position in late 2006. Dr. Capadona joined the APT Center as a post-doctoral fellow under the mentorship of senior APT Center investigators (S. Rowan, D. Tyler and C. Weder) in

Figure 2: Jeffrey Capadona, PhD.

2005. Dr. Capadona is a full-time VA investigator based in the Department of Macromolecular Science at Case Western Reserve University and is working in support of APTC initiatives in the areas of novel dynamic materials for rehabilitation applications. Dr. Capadona has become a key member of our faculty capable of developing and conducting his own independent research program within the APT Center.

- **VISN Position Awarded**

Figure 3: Joseph Potkay, PhD.

Dr. Joseph Potkay was awarded a full time research position with the APT Center in October 2006 funded entirely by VISN10. This is an institutional commitment between the VISN and the LSCDVAMC to support a new investigator in high priority areas who are in turn expected to generate their own program funding within 2 years.

Dr. Potkay will primarily be located at the Louis Stokes VA Medical Center with a secondary office in the TDL at Case Western Reserve University. Dr. Potkay's research is directly targeted towards medical devices that have a high chance of being used in clinical trials and strong commercial feasibility. His areas of expertise are MEMS sensor and actuator design and fabrication, microtechnology and nanotechnology, cleanroom processes and process characterization, system-based device design and integration, software development and debugging, digital and analog circuit design and verification, device theory and modeling, and system integration. His research compliments the work of the APT Center because it focuses on the overall system design of medical devices – platforms using actuators, circuits and interfaces. This research could directly affect up to 55% of the veteran population.

Objective 4: Conduct first two workshops in the Clinical Needs Assessment Series.

Progress and Accomplishments:

- **Needs Assessment on Sensory and Motor Loss Results in an Awarded Grant Application**

Our formal *Clinical Needs Assessment* project was launched in 2005, led by the Medical Director (G. Creasey) and Director of Operations (S. Iveljic). Our first workshop was held in the VA Learning Exchange in February 2006. This is the first of a network of learning laboratories being established in the VA Healthcare System of Ohio with the purpose of assisting VA staff to accelerate their work using a variety of techniques that facilitate collaborative learning and organizational change. The workshop was planned with the assistance of Robert Means, Ph.D., the National Director for Education Research and Dissemination of Innovations in the VA Employee Education Service.

Participants included approximately 30 veterans, external researchers and rehabilitation clinicians, and representatives from the medical device industry, as well as APT Center staff and leadership. Appreciative inquiry and reiteration were used to identify veteran needs in this workshop. Unmet clinical needs were grouped using an affinity diagram. The grouped needs were then prioritized using a criterion based scoring methodology formula incorporating the number of veterans affected, the severity of the need, and the time factor involved.

A VA RR&D (Rehabilitation Research & Development) Research Initiative Program (RIP) grant was awarded to our investigators on novel materials for wheelchair cushions as a result of this Needs Assessment. In addition, the potential for collaboration with the Pittsburgh VA Research Center of Excellence Human Engineering Laboratories (HERL) will be further explored in January 2007 as a result of this workshop.

By design, the first workshop was small and local in nature and focused on motor system issues in order to refine the assessment process and prepare for a second workshop that engaged experts at a national level on a broader range of issues affecting the disabled veteran, including sensory loss and prosthetics (see below).

- **Prosthetic Needs Assessment Encourages 5 Collaborations**

  This event aimed to identify and prioritize the needs of individuals with limb loss, to enable the voice of the prosthetic user to be heard, collaborations to be built, and future research directions to be set.

  The workshop focused on unmet needs in limb prosthetics and potential ways in which these might be met by new technologies including dynamic biomaterials, polymers, nanotechnology and MEMS. The format consisted of small group brainstorming sessions including users of prostheses, researchers, clinicians, and industry using a learning laboratory.

  Over 50 individuals from eight states, all experts in or users of prosthetic technology attended. These included researchers from the VA's Center for Limb Loss Prevention and Prosthetic Engineering in Seattle, and the Jesse Brown VA Medical Center Motion Analysis and Research Laboratory (Chicago, IL). The prosthesis users were given the opportunity to voice their most pressing needs and describe their experiences and potential solutions. The small groups then put together action plans and timelines to guide future research submissions. After the workshop, 5 potential collaborations on sockets and suspension and sensation and control were identified and are being explored.

- **Burns Tutorial Stimulates Identification of New Projects**

  We held a specialty tutorial on burns with 14 clinical experts, scientists, and engineers. Dr. Charles Yowler was the key clinical speaker and was previously Chief of the Burn Study Branch in the U.S. Army Institute of Surgical Research at Fort Sam, Houston, Texas. Projects in the areas of tissue engineering and preparation of graft sites were identified with LOIs expected. In addition, one of our investigators attended the State of the Science in Burn Research meeting hosted by the American Burn Association where leaders in burn care and research met in Washington, DC, to develop and prioritize a national research agenda for evidence-based burn care. Conference attendees included burn team members, burn researchers, members of federal grant agencies, journal editors, burn survivors and members of the Department of Defense.

Objective 5: Implement the APT Center Quality System (QS).

Progress and Accomplishments:

- **Finalized all Level 1 and Level 2 Documents**

  Our Quality System initiative was launched in October 2005. In 2006, our Quality Manual (Level 1) was drafted and circulated to Leadership and Senior Administration for comments. Additional Quality Procedures (Level 2) were approved. Included in the quality manual are a) the quality related Center organization, b) responsibility and authority for quality, c) resources committed, d) quality system review policies, and e) quality planning.

- **Released All Documents through Quality System Document Control System**

  All Documents released have been through the Quality System and the following procedures have been newly released for 2006: Management Responsibilities, Personnel Training, and Control of Quality Records. As part of our efforts in continuous improvement of our internal Quality System, the original Design Controls Standard Operating Procedure (SOP) was revised for additional clarification (i.e., Design Control Flowchart was added) purposes and to link to the newly released SOP defining Management Responsibilities within the Center. Our original Document Control SOP was also modified for clarification of the document numbering scheme and to address handling of both hard copy and electronic copy media. Finally, all relevant forms necessary for efficient utilization of these procedures were released.

- **Completed Training on all QS Documents to All APT Center Personnel**

  We hosted a two day training session with Excel Partnership, Inc. focusing on quality procedures related to QSR and Design Control. Excel Partnership, Inc. provides a comprehensive ISO 13485 training support program for FDA regulated industries enabling implementation of an effective ISO 13485 quality management system and

compliance with FDA requirements for medical device and pharmaceuticals manufacturers. Upon release of all newly generated and revised SOPs, we held an afternoon training session for all Center employees as well as employees of the Cleveland FES Center and Boston Center for Innovative Visual Rehabilitation as part of our internal quality training efforts and exporting of quality elements to other VA Centers of Excellence.

Objective 6: Transfer three ongoing development projects into the APT Center Design Controls.

Progress and Accomplishments:

- **Brought 6 Projects under APT Center Management**

  6 projects have been transferred to the APT Center for manufacture and distribution through our formal Platform Advisory Board evaluation process. The Platform Advisory Board identifies needs and solutions that fall within the mission and expertise of the APT Center through evaluation against established criteria. The projects that met these criteria include the Intramuscular Stimulating Electrode, Epimysial Stimulating Electrode, Spiral Cuff Nerve Electrode, Flat Interface Nerve Electrode (FINE), and two different Myoelectric Recording Electrodes.

- **Established Project Teams**

  Our Senior Engineering Manager took the projects assigned to APT for Design Control Documents and established project teams that were compatible with the skills needed to achieve the proposed solution.

- **Evaluated and Formally Approved Project Development Plans**

  Project Development Plans for 4 out of the 6 projects were formally approved. Modifications of the project development plans, or new project development plans, may be proposed by the project team and may require further iteration by the lead engineer.

- **Completed the Initial Phases of Design Controls up through Design Verification**

  Two of the six projects will have completed Design Control Documentation because they are new designs.

- **Submit at Least One Design Dossier to FDA to Apply for a Device Master File**

  The final steps to complete the design verification of the Flat Interface Nerve Electrode (FINE) were initiated this year. The Device Master File for the FINE is scheduled to be submitted in June 2007.

Objective 7: Produce APT Center products and assure availability to collaborators.

Progress and Accomplishments:

- **Solidified Relations with External Contractors**
  - **Ardiem, Inc. (Indiana, PA)**

We had allied with this manufacturer of human grade implantable medical devices to produce stimulating electrodes in 2005 and during this reporting period were successful in getting this contractor to supply products to external collaborators. We initiated the technology transfer process for spiral nerve cuff electrodes with the involvement of members of the electrode project team. Ardiem successfully demonstrated fabrication of a variety of complex leads (i.e. Four Helix, Tri-Y) required by these electrodes to our specifications, by using the transferred drawings and protocols for their manufacture. We plan to complete this technology transfer process in early 2007 making these electrodes more easily accessible to all of our internal and external collaborators. In addition, we were successfully jointly awarded a Department of Defense grant for the development of advanced wireless systems for the control of powered limb prostheses.

  - **Ethox, Inc. (Buffalo, NY)**

This contract sterilization company has assisted us with establishing FDA compliant protocols for sterilizing, and shipping testing of current packaging for all current implantable components. We have also established a single sterilization cycle for all implantable components under APT Center design control and quality system management.

  - **Undisclosed Neuromodulation Company**

We have engaged in providing nerve cuff electrodes to a U.S. based neuromodulation company to help facilitate their animal studies related to determining the efficacy of their proposed therapy. We have entered into this collaboration by implementing a Non-Disclosure Agreement and beginning manufacture of these spiral nerve cuffs at the end of 2006. We intended to provide upwards of 30 of these cuffs to this neuromodulation company in 2007.

  - **NDI Medical (Cleveland, OH)**

During this reporting period we started working with NDI Medical to jointly develop a clinical programming interface for a new generation of implanted pulse generators. The software platform will be used to edit patterns of stimulation for a variety of motor and sensory system applications.

  - **Undisclosed Early Stage Healthcare Company**

We have entered into discussions by implementing a non-disclosure agreement with an early stage U.S. based healthcare company in order to facilitate a potential SBIR/STTR grant submission in 2007 for our ISSD technology now under development.

- **Point Medical (Crown Point, IN)**

We initiated a relationship with Point Medical to fabricate and assemble components of a new flat interface nerve electrode (FINE). To date, 175 FINE electrodes have been received.

- **Promerus Electronic Materials (Brecksville, OH**)

We are collaborating with Promerus® Electronics Materials relative to our efforts in advancing polymer materials for neural interfaces and other medical devices. The Promerus® laboratories in Brecksville, OH, have a long history of technology development that "stretches back over thirty years". Current development efforts at Promerus® focus on advanced materials for electronic applications, however, we are working with them to investigate the biocompatibility of their state-of-the-art polymer materials. Other Centers of Excellence may be interested in joining in this effort to use these materials for their applications.

- **Formalized Intellectual Property Arrangements with Partner Institutions**

Intellectual Property Arrangements have been formalized with both VA Legal Counsel and Case Western Reserve University's Technology Transfer Office. As a result, we have created and approved Standard Operating Procedures within our Quality System entitled: Intellectual Property, VA Report of Inventions Form, Case Invention Disclosure Form, VA/CASE PI NDA Form, and APT Internal Processing of Orders.

- **Initiated New Collaborative Project with the University of Pittsburgh**

In the last quarter of 2005, we established a new collaborative feasibility study with researchers at the University of Pittsburgh (D. Weber). The APT Center portion of the effort concentrates on the design and fabrication of multi-contact spiral nerve cuff recording electrodes to acquire sensory signals from the dorsal roots in a feline animal model. We have set design specifications and functional requirements of the devices in conjunction with our collaborators and are in the process of developing the fabrication techniques to produce a small quantity of recording electrodes for initial feasibility testing in Pittsburgh. As described in section **E2: Active Collaborations**, once the performance of the device is verified we plan to produce quantities sufficient to support ongoing funded projects in Pittsburgh dedicated to reconstructing the movement of a limb from afferent signals, the outcome of which should have applications for the control of neural prostheses or other assistive devices.

Objective 8: Secure leveraged funding for APT Center projects from at least two sources.

Progress and Accomplishments:

During this period the APT Center secured funding for a total of twelve (12) projects from six (6) different sources. These sources include the VA as well as the National Institutes of Health (NIH), the Department of Defense (DOD), Telemedicine and Advanced Technology Research Center (TATRC), the Army Research Office (ARO) and the National Science Foundation (NSF).

Objective 9: Submit at least 5 manuscripts for publication in peer reviewed journals and 10 presentations at national conferences.

Progress and Accomplishments:

In 2006 APT Investigators submitted eighteen (18) manuscripts published in peer reviewed journals as well as 34 manuscripts that were under revision during this period. Our investigators also completed a total of 48 presentations at national conferences.

Objective 10: Launch at least one new initiative in advanced prosthetics or other high priority area for the VA.

Progress and Accomplishments:

- **Awarded $1.4 Million by TATRC for Development of a Prosthetic Arm Control Device for Amputees**

  Our grant funded by the Department of Defense focuses on improving the control interface between the user and his/her upper limb prosthetic device through the application of new platform technologies being developed by the APT Center. The purpose of the project is to evaluate the significance of interfacing with the intact nervous system to improve control of a powered prosthesis and provide sensory feedback to the user. It should result in more natural movements of existing myoelectric prostheses through a new high performance neural interface. The grant seeks to develop a prosthesis system that would provide a more functional prosthesis for transhumeral amputees. The prosthesis would increase the chance of retention of active duty military for combat amputees, continued military career opportunities, and overall increased well being.

Objective 11: Participate in one new collaborative project with clinical and/or research groups within the VA Healthcare system.

Progress and Accomplishments:

- **Wireless communication and biosignal telemetry**

  We have been exploring the potential of collaborating with the Center of Excellence in Limb Loss Prevention and Prosthetic Engineering (Seattle, WA) to further the development and eventual clinical application of our implantable micro-miniature EMG telemeter. In particular, the goal of a collaborative effort would be to develop a myoelectrically controlled torsional pylon for a trans-tibial amputees that allows safe and effective turning.

- **Quality management**

  One major achievement over the past year has been the initiation of our comprehensive quality management system for design and document control. Introduction of the Quality System occurred in October 2005. This system has been applied to the first APT Center projects in 2006 and can be made available for any VA Center of Excellence interested in maintaining FDA compliance with its design activities. We are working with the VA RR&D Boston Center for Innovative Visual Rehabilitation to begin development on their quality systems.

- **Microfabrication of implantable devices**

  We have been exploring the potential of collaborating with the VA RR&D Center for Innovative Visual Rehabilitation (Boston, MA) to develop new drug eluting coatings for implantable devices that reduce inflammation and promote integration with the tissue. Devices that need to interact directly the nervous system would be targeted initially but would lead to more generalizable materials and techniques.

- **Sensor development**

  We are equipped to design and fabricate new wireless sensors for a variety of rehabilitation uses and have had preliminary discussions with the VA Center for Wheelchair and Related Technology in Pittsburgh relative to sensor needs for smart wheelchair applications. A wheelchair tutorial is scheduled for January 2007.

- **Focus groups and needs assessment**

  Our Prosthetic Needs Assessment was attended by other VA Stakeholders such as Thomas Teklinsky, Orthotist and Prosthetist; Dr. Mirza Baig, Chief of PMRS; Jeffrey Robbins, National VA Director of Podiatry; all three located in the Louis Stokes Cleveland Department of Veterans Affairs; Dr. Dudley Childress, Receiver of Paul B. Magnuson Award by the Research and Development Service of the Department of Veterans Affairs in Chicago, IL; Dr. Steven Gard Director of the Chicago VA Motion Analysis Research Lab; Glenn Klute, Research Associate, VA Puget Sound Health Care System in Seattle, WA. As a result we are in the process of facilitating a formal assessment workshop on the needs of veterans with diabetes in collaboration with the Center of Excellence in Limb Loss Prevention and Prosthetic Engineering in Seattle.

3. Future Goals and Objectives

The long-term goals of the APT Center remain unchanged from our original plan as articulated in the Center grant proposal. Specific short-term objectives for 2007 are as follows:

1. Establish an APT Center governing board and convene at least one meeting of this advisory panel.
2. Complete facility renovations at the Technical Development Laboratory and proceed with the renovations at the Louis Stokes Cleveland Department of Veterans Affairs Medical Center for APT Center activities.
3. Build capacity by recruiting at least two investigators with parallel research interests.
4. Continue with deep implementation in the Clinical Needs Assessment series and survey the environment for potential additional Needs Assessment categories.
5. Increase the bandwidth of the APT Center Quality System.
    a. Assist other Centers of Excellence in implementing the Quality System for their projects.
6. Transfer three ongoing development projects into the APT Center Design Controls.
7. Submit at least one design dossier to FDA to apply for a Device Master File.
8. Maintain increased productivity levels of and access to APT Center products.
9. Secure leveraged funding for APT Center projects from at least two sources and secure independent funding for three projects.
10. Submit at least 5 manuscripts for publication in peer reviewed journals and 10 presentations at national conferences.
11. Participate in one new collaborative project with clinical and/or research groups within the VA Healthcare System.

4. Plan adjustments

Adjustments to the operations plan of the APT Center have been few and relatively minor. Our External Advisory Council composition was revisited and it was determined that the council should be divided into stakeholder meetings and an external advisory board. The stakeholder meetings will be held twice a year and include representatives from the VA and Case. The main focus of these meetings will be strategic direction. The External Advisory Board will be held on an as needed basis to advise on a specific subject matter.

B. PROJECT REPORTS

During the reporting period, APT Center investigators submitted a total of 24 applications for research funding to various federal and private agencies. Four (4) submissions were VA Merit Review applications. Another 20 grant applications were submitted to other federal agencies, nine (9) grants were submitted to the National Science Foundation (NSF), five (5) to The National Institutes of Health (NIH), two (2) submitted to the Army Research Office (ARO), one submitted to the Department of Defense (DOD) and an additional one submitted to the Telemedicine and Advanced Technology Research Center (TATRC). Peer review of 8 of these opportunities is still in process, with funding decisions pending.

1. ***Project Submissions/Approvals (VA, Other Federal, and Private Funding)***

	Status	Investigator	Title	Sponsor	Period	Total Request
1.	Approved	Bogie (PI) Capadona (Co-PI) Weder (Co-PI)	Advances in Pressure Relief Technology using Dynamic Materials	VISN RIP	N/A	$10,000
2.	Approved	Damaser	Recovery of Stress Urinary Incontinence in Diabetes	VA RR&D	10/06-9/09	$249,000
3.	Approved	Damaser	Mechanisms of Incontinence Following Vaginal Distention	NIH	4/06-3/11	$200,000
4.	Pending	Damaser	Wireless Implantable Pressure Monitor for Clinical Application	VA RR&D	N/A	$742,800
5.	Approved	Garverick	High-Temperature ASIC for Orbital Sensor Interface[1]	DOD	11/06-5/07	$27,930
6.	Submitted	Garverick (PI) Bogie (Co-Pi) Zorman (Co-PI)	Flexible Electronics and Communication Technology for Clinical Surface, Closed-Loop Diagnosis and Therapy[1]	NSF	6/07-5/10	$330,000
7.	Pending	Garverick	Electrode Arrays for Neurodynamic Studies[1]	NSF	6/07-5/10	$123,089
8.	Pending	Garverick	Miniature High-Resolution Ultrasound Array[1]	NIH	7/07-6/11	$72,206
9.	Approved	Kirsch	Prosthetic Arm Control Device for Amputees[1]	TATRC	9/06-8/07	$1,431,000
10.	Approved	Kirsch	Research Career Scientist	VA RR&D	10/07 - 9/12	$306,250

	Status	Investigator	Title	Sponsor	Period	Total Request
11.	Pending	Rowan	Organometallic Sensors for the Detection of Chemical Warfare Agents[1]	ARO	2/07-1/310	$343,725
12.	Pending	Rowan	The Development of Metallo-Supramolecular Materials[1]	NSF-CHE	8/07-7/10	$496,717
13.	Pending	Rowan	Novel Molecular-Actuator-Based Active Nanostructures: Synthesis, Nanomechanical Behavior and Electrical Conductance[1]	NSF-CMMI	8/07-7/10	$358,043
14.	Pending	Rowan	Controlling the Processing Behavior of Micron- to Nanometer-Scale Particle Systems through the Use of Responsive Polymers[1]	NSF-CBET	9/07-8/10	$370,911
15.	Approved	Rowan	Healing Polymers: The Self Assembly Approach[1]	NSF	8/06-7/09	$420,000
16.	Approved	Rowan	Multifunctional Metallosupramolecular Materials[1]	ARO	7/06-8/09	$273,575
17.	Pending	Triolo	Senior Research Career Scientist	VA RR&D	10/07 - 9/14	$586,515
18.	Submitted	Tyler	Neural Interfaces for Prosthetic Command and Sensory Feedback[1]	VA RR&D	6/06-5/09	$722,400
19.	Approved	Tyler	Peripheral Nerve Implementation of Functional Neuroprostheses	NIH	4/07-3/09	$424,875
20.	Approved	Tyler (PI) Rowan (Co-PI) Weder (Co-PI)	Stimulus-Responsive, Mechanically-Dynamic Nanocomposite for Cortical Electrodes[1]	NIH	6/06-5/08	$424, 875
21.	Approved	Zealer (PI) Tyler (Co-I)	Electrical Stimulation of the Bilaterally Paralyzed Larynx Paced with Respiration[1]	NIH	6/06-5/11	$590,904

	Status	Investigator	Title	Sponsor	Period	Total Request
22.	Submitted	Weder (PI) Rowan (Co-PI) Triolo (Co-PI) Quinn (Co-PI)	A Biomimetic Approach to Adaptive Nanocomposites[1]	NSF	N/A	$ 1,399,997
23.	Approved	Zorman (PI) Tyler (Co-PI)	A Microfabricated Neural Electrode Array Technology for a Long-Term Implant Applications	NSF	9/09-9/09	$240,000
24.	Submitted	Zorman	IGERT Program for the Development of Integrated, Application-driven Micro and Nanofabricated Sensor Technologies[1]	NSF	7/07-6/12	$2,999,780
	Total VA			4	-	$ 565,250 Approved $1,216,315 Pending
	Total Other Federal			20	-	$ 4,033,159 Approved $ 1,874,691 Pending
	Grand Total			**24**	**-**	**$4,598,409 Approved** **$3,091,006 Pending**

[1] In collaboration with other VA Centers of Excellence, other leading academic institutions, or industry.

2. *Ongoing Funded Projects (VA, Other Federal, and Private Funding)*

The APT Center participated in fifteen (15) ongoing projects funded by various sources that were initiated prior to the reporting period.

	Status	Investigator	Title	Sponsor	Period	Total Award
1.	Ongoing	Damaser	Research Career Scientist	VA RR&D	10/04 - 9/09	$306,250
2.	Ongoing	Damaser	Mechanisms of Female Incontinence in Diabetes	NIH	9/05-9/07	$150,000
3.	Ongoing	Garverick	SiC TAPS Sensors for Extreme Harsh Environments[1]	DARPA	1/05-5/08	$580,347
4.	Ongoing	Garverick	Neuromechanics of Multifunctionality in Aplysia[1]	NIH	5/05-4/09	$127,351
5.	Ongoing	Rowan	Development of Novel Organic/Inorganic Hybrid Oligomer Architectures[1]	NSF-Career	6/02-5/07	$600,500
6.	Ongoing	Rowan	High Temperature Resistant Organic/Inorganic Hybrid Polymers: An Architectural Study[1]	ARMY	9/03-8/06	$236,079
7.	Ongoing	Rowan	Center for Layered Polymeric Systems[1]	NSF S&T Center	6/05-5/10	$18,460,000
8.	Ongoing	Triolo	Center of Excellence, Advanced Platform Technology	VA RR&D	1/05 - 1/10	$4,250,000
9.	Ongoing	Triolo	Research Career Scientist	VA RR&D	10/02 - 9/07	$306,250
10.	Ongoing	Triolo	Enhancing Neuroprosthesis Performance with Nerve Cuff Electrodes[1]	NIH	9/03-8/06	$1,128,525
11.	Ongoing	Triolo	A Hybrid Neuroprosthesis for Mobility After Paralysis from Spinal Cord Injury[1]	DOD	3/05 - 2/09	$1,745,533

	Status	Investigator	Title	Sponsor	Period	Total Award
12.	Ongoing	Tyler	Dynamic Larygotracheal Closure Using BION Technologies[1]	VA RR& D	10/04-9/08	$1,235,800
13.	Ongoing	Young (PI)	Intelligent Sensor Network for In-Vivo Real Time Biological Dynamic System[1]	NSF	9/03 – 8/07	$675,000
14.	Ongoing	Young (PI)	RF Data Transmitter and Receiver Modules for MEMS[1]	ARO	6/05 - 8/07	$150,000
15.	Ongoing	Young (Co-PI)	Nerve Reshaping for Improved Selectivity[1]	NIH	7/05 – 6/10	$1,500,000
	Total VA			4		$ 6, 098,300
	Total Other Federal			11		$ 25,353,335
	Grand Total			**15**		**$ 31,451,635**

[1] In collaboration with other VA Centers of Excellence, other leading academic institutions, or industry.

3. Project Progress Notes

The APT Center investigators led or actively participated in numerous ongoing projects in 2006 and either initiated or assumed principal roles in the ten projects described below. Detailed summaries of the status of each project, including plans for publication and future funding opportunities, are provided. These projects would be prohibitively difficult or impossible to pursue without the unique environment and contributions of the APT Center.

Project #1: Clinical Needs Assessment

Principal Investigators: Graham Creasey, M.D., and Suzana Iveljic, M.B.A.

Description

The APT Center places high priority on developing technology that is clinically relevant. This project consists of using systematic processes to determine the needs of veterans that may be addressed by advanced technologies. This information can be used by us and other researchers in focusing research in the direction most beneficial to the veteran. The project collects and examines information about needs and utilizes that data to determine priority goals, to develop a plan, and to allocate funds and resources. Veterans, researchers, rehabilitation clinicians, and representatives from the medical device industry, are included with APT Center Co-Investigators and Leadership in gathering data. Both structured and informal data gathering techniques are employed. Structured techniques include focus groups, surveys, and expert panels; informal techniques include user-engineer and clinician-engineer interaction, web-based methods, and unsolicited feedback obtained at conferences and scientific meetings.

Objectives

The main objective of this project is to identify and prioritize the needs of veterans that may be solvable by applying new and emerging technologies in the short, medium, and long-term. A secondary objective is to learn the most effective techniques for obtaining this data.

Research Plan

Surveys provide general impressions and direction but not enough detail to develop specific technological applications. Consumers have difficulty trying to define the “next step” technological device and it is rare that consumers can express their needs in a way that is translatable to technical specifications. Our best successes come from having those involved in technical design and development converse and interact directly with consumers during their regular activities. Interactions such as these enable critical design specifications that might otherwise go unnoticed be identified. Therefore, we plan to use focus groups, workshops, expert panels, and direct interaction with veterans at the foundation of our research plan. Once we obtain a relatively broad picture of the technological needs, we can follow-up and supplement this with surveys, web-based information gathering, and observation to fill in details, provide feedback, and complete our assessment.

Methodology

We are in the process of holding a series of workshops at the Cleveland VAMC Learning Exchange. This location was chosen due to its reputation as an innovative, flexible, and high performance work laboratory equipped with technology that supports creative work processes and enhances collaborative learning. The facility includes

technology for multi-user collaboration (Smartboards), capturing notes and graphics from whiteboards (E-Beams), handwriting and voice recognition via PC Tablets, multi-site high-bandwidth videoconferencing, and audiovisual recording and rapid reproduction.

The Cleveland VAMC Learning Exchange also brings skilled facilitation to the table. Robert Means, Ph.D., who is responsible for creating the Learning Exchange, is the National Director of Educational Research and Dissemination of Innovations in the VA Employee Education Service and has many years of experience in educational research including his previous position as the Chief Employee Education Officer for the VA. He has also provided access to several skilled consultants.

Nancy Dixon, Ph.D., is an author and consultant working with clients to create effective ways to share knowledge across organization boundaries. Dr. Dixon has studied knowledge transfer systems in organizations around the world and based on that study has constructed a framework that helps organizations determine the type of system that best leverages each different type of knowledge. That framework is the subject of her book *Common Knowledge: How Companies Thrive by Sharing What They Know.* Many of the systems she describes rely primarily on person-to-person interaction and others combine personal interaction and technology.

In addition to using state-of-the art facilities and highly qualified consultants, the methodology driving the agenda of the workshops has been used in over 50 projects in 15 Veterans Integrated Service Networks (VISNs) encompassing 65 Veterans Affairs Medical Centers (VAMCs), Community Based Outpatient Clinics (CBOCs), the Veterans Benefit Administration (VBA) and National Cemetery Administration (NCA) organization, and within National Headquarters. It is a method of qualitative discovery, research, and social intervention that integrates the aims and principles of change management with organizational learning. It also recognizes and leverages the largely unrecognized contributions of informal work and learning.
The three phases of this methodology are:

a. “Discovery” – observing and talking with those who are potential users of the technology or who will be affected by it.

b. “Co-design” – initially using divergent thinking to scan a wide range of options, followed by convergent thinking to classify and group the resulting possibilities into practical solutions and products.

c. “Deep implementation” – evaluating prototypes while maintaining a willingness to revise, adjust, and amend the process. This recognizes the iterative nature of development whereby feedback refines the design and corrects misconceptions or unintended consequences.

We are also using other techniques such as Appreciative Inquiry, developed by David Cooperrider and his colleagues at the Case Weatherhead School of Management in

Cleveland. This is a process that reduces premature judgment and engages an entire system in an inquiry as to what works in an organization.

Finally, other proven supplemental methodologies such as surveys and web-based information gathering will be used to reaffirm our findings and provide for insight into other exploratory areas.

Milestones

We organized two Needs Assessment Workshops and one Specialty Tutorial this year. The first workshop occurred in February 2006, focused primarily on unmet needs of veterans with damage or disease of the central nervous system. As a result of this Needs Assessment, a VA RR&D (Rehabilitation Research & Development) Research Initiative Program (RIP) grant was awarded to our investigators on novel materials for cushions. In addition, a collaboration with the Pittsburgh VA Research Center of Excellence and their Human Engineering Research Laboratories (HERL) will begin in January 2007 as a result of this workshop.

Figure 4: Clinical Needs Assessment Participants February 2006.

Figure 5: Clinical Needs Assessment Discussion Group September 2006.

The second workshop was in September 2006 and incorporated both discovery and co-design for veterans with amputation and limb prostheses. Over 50 individuals from eight states, all experts in or users of prosthetic technology attended. The prosthesis users were given the opportunity to voice their most pressing needs and share their daily experiences and potential solutions. The small groups then put together action plans and timelines to guide future research submissions. After the Prosthetics Needs Assessment workshop, 5 potential collaborations on sockets and suspension and sensation and control were identified and are in the exploratory stages.

We held a specialty tutorial on burns with 14 clinical experts, scientists, and engineers. Dr. Charles Yowler was the key clinical speaker and was previously Chief of the Burn Study Branch in the U.S. Army Institute of Surgical Research at Fort Sam, Houston, Texas. Projects were identified in the areas of tissue engineering and preparation of graft sites, with LOIs expected. In addition, one of our investigators attended the State of the Science in Burn Research meeting hosted by the American Burn Association.

Clinical Relevance

The entire purpose of this project is clinical relevance and clinical use of the technologies developed by the APT Center. It is crucial for the APT Center to develop technologies that meet the clinical needs of veterans with disabilities and this project enables us to obtain information regarding important unmet needs. It also allows us the opportunity to formally solicit clinician leadership and participation in assessing needs, developing functional specifications, developing and evaluating prototypes, and disseminating products for clinical testing. It enables all projects stemming from the APT Center to be clinically relevant.

Project #2: Associate Investigator Award – Granted to work on "Stimulus-Responsive, Mechanically-Dynamic Nanocomposite for Cortical Electrodes"

Principal Investigator: Jeffrey Capadona, Ph.D.

Mentors: Dustin Tyler, Ph.D., Christoph Weder, Ph.D., Stuart Rowan, Ph.D., Ronald Triolo, Ph.D.

Description

The overall goal of this Associate Investigator Award is to provide Dr. Capadona with the opportunity to continue to develop as an independent researcher under the mentorship of proven LSCDVAMC investigators. He will work as part of a research team to train in polymer materials development and fabrication, and in the *in vivo* assessment of the material's compatibility. He will also be attending regular seminar series related to the field, disseminate his research findings by publishing and presenting at national meetings, and attending graduate level courses pertaining to the development of polymeric materials for uses as biomedical materials in the Department of Macromolecular Science and Engineering and the Department of Biomedical Engineering at Case.

Preliminary Results

Dr. Capadona has rapidly assimilated into the research groups of his mentors, and has developed first generation polymer nanocomposites towards stimulus responsive

cortical electrodes. He is currently training in the surgical techniques required for the *in vivo* evaluation of these materials.

Dr. Capadona's efforts have also lead to the submission of two co-authored papers (under review), and presentations at multiple scientific meetings.

Milestones

Dr. Capadona has been able to successfully develop dynamic materials that change their mechanical stiffness with response to two independent stimuli.

By the first quarter of 2007 we expect that preliminary *in-vivo* testing will be underway, followed by full-scale animal trials in the second quarter of 2007.

Through his participation in the APT Center's Clinical Needs Assessment Series, Dr. Capadona has begun to develop collaboration with additional VA Investigators, and secured VA RR&D funding for an additional research program.

During the first quarter of 2007, Dr. Capadona will also attend two graduate level courses at Case Western Reserve University.

Future Grant & Publication Plans

Current funding for the Associate Investigator Award is scheduled to continue through September 2008. Before this funding lapses, a Career Development-2 Awards (CDA-2) will be submitted for the continued mentored development under the guidance of VA Investigators.

The preliminary results obtained from Dr. Capadona's direct and contributed research efforts are in preparation for submission of multiple manuscripts:

Goal of 2007 Submission:

1. *Templated Cellulose Nanocomposites: New Methods for Fabrication*

   This manuscript will discuss the physical and mechanical properties of polymer nanocomposites derived from cellulose using a newly developed processing procedure.

2. *Mimicking Sea-cucumber's Skin: Mechanically-Dynamic, Stimulus-Responsive Nanocomposites*

   This paper will outline the synthesis and fabrication, as well as the mechanical testing and characterization of our first generation dynamic nanocomposites.

3. *Water insoluble Cellulose Aerogels for Tissue Engineering Scaffolds*

   This paper will discuss findings related to the self-assembly of cellulose fibers into a rigid and porous network that can be chemically cross-linked into scaffolds for tissue engineering applications.

4. *Thermally Controlled Mechanically-Dynamic Polymer Nanocomposites*

This paper will discuss the development of reinforced polymer nanocomposites that demonstrate changes in mechanical properties with heating and swelling in water.

Goal of 2008 Submission:

1. *In Vitro Evaluation of the Cytotoxicity of Mechanically Dynamic Cortical Implant Materials*

   This paper will be a summary of the *in vitro assessment of the cytotoxicity* of the novel nanocomposite material, as well as the *in vitro* assessment of the electrode insertion into mimetic brain tissue (gelatin).

2. *In Vivo Evaluation of the Mechanically Dynamic Cortical Implant Materials*

   This paper will summarize the *in vivo* evaluation of the acute and chronic implant studies with electrodes fabricated from our nanocomposites.

Clinical Relevance

The clinical relevance to the research project that Dr. Capadona is contributing to during his development is as follows:

This development effort is highly significant as there is an unmet need for mechanically-dynamic material, which will enable development of a wide range of biomedical devices that will significantly and positively impact Veteran care. Such applications could include dynamically compliant stress transducers, orthopaedic and prosthetic devices with controllable joint stiffness, conformal matching of socket mechanical properties, neuromimetic electrodes for neural interfaces, obstructive sleep apnea (OSA) devices that dynamically stiffen the airway at night and are compliant during the day, implants for erectile dysfunction, vocal fold implant to stiffen paralyzed folds for speaking and open the folds for breathing, dynamic loading elements in implants, dynamic implantable connectors with minimal stiffness to connect and disconnect and rigid to prevent disconnect, and biodynamic sensors. Further, this material will allow other investigators to devise many new and as yet unimagined applications.

Project #3: Integrated Surface Electrical Stimulation Device for Therapeutic Applications

Principal Investigator: Kath Bogie, D.Phil.

Co-Investigators: Steven Garverick, Ph.D. & Christian Zorman, Ph.D.

Staff/Students: Jeremy Dunning, M.S.; Jonathan Sakai, B.S.; & Daniel Howe, B.S, Allison Hess

Description

The overall goal of this project is to develop an integrated surface stimulation device (ISSD) combining the use of advanced materials, fabrication techniques and design together with a simple, user-friendly communication interface in a novel medical device costing less than $100. It consists of a flexible substrate, battery, and custom integrated circuitry integrated into a conforming occlusive dressing. The device can be applied over a chronic wound as a bandage (for days or weeks at a time) and deliver therapeutic electrical currents to accelerate healing without cables, and other external electronics. The device can then be simply removed, disposed of, and replaced to continue treatment. The ISSD will be a therapeutic electrical stimulation device that achieves high efficacy and safety *and* high acceptance by both clinicians and user.

The initial objective is to investigate use of the ISSD for **treatment of chronic ischemic wounds**; however multiple therapeutic applications in acute clinical care and rehabilitation would be positively affected by utilization of electrical stimulation (ES) as a platform modality. This project will thus provide the basis for the further development of a novel surface stimulation platform technology with the potential for widespread clinical utility both within the VA Health Care system and in other health care settings.

Objectives

a. To establish the proof of concept for the ISSD through the design and preliminary testing of a prototype device.

b. To implement use of the ISSD in our current ischemic wound animal model.

Research Plan & Methodology

A prototype ISSD is being designed that meets the primary functional requirements that it be capable of delivering ES treatment using pre-defined stimulation patterns safely and reliably for periods up to 7 days (Figures 6 and 7). In addition the device is flexible and durable. All stimulation system components are integrated into a low-profile, lightweight device that can be 'worn' by the user in a similar manner to a standard-type occlusive wound dressing. The proposed integrated surface stimulation device (ISSD) will thus combine ease of clinical use and reliability with complete patient mobility.

The basic initial design will incorporate forward compatible upgradeability. The open architecture will allow the potential for functional expansion such as multi-channel stimulation and biofeedback sensor capability. This will be based on the second core concept that the device will comprise an integrated power supply and pre-programmable stimulator/control system mounted on the upper face of a flexible polymeric 'backbone'.

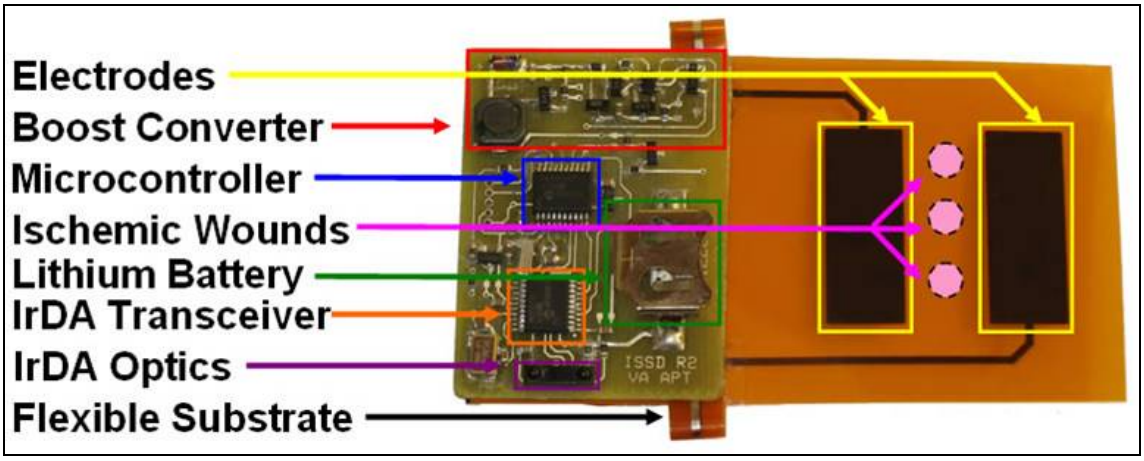

Figure 6: ISSD mock-up.

Testing of all components of the system will be performed to insure their performance and reliability. Bench testing and *in vitro* testing will be performed prior to *in vivo* testing in the rabbit model.

Following bench testing the flexible ISSD will be implemented in our animal wound model and the effects of ES wound therapy will be evaluated using a randomized controlled study design.

Preliminary Results

A prototype ISSD has been fabricated on a rigid printed circuit board (PCB) substrate for use in development and testing of the device. A first-generation external communications protocol has been developed which allows two-way communication to both control the stimulation variables and download information on wound status.

Complete evaluation of the individual components of the ISSD has been completed. Benchtop testing of a working prototype has commenced to determine electrical and mechanical functionality under simulated animal testing conditions.

Milestones

An initial series of animal testing using the prototype flexible SSD will be carried out in the second quarter of 2007, which will result in information necessary to optimize the design of the integrated circuit by the end of the year. Preparation for production and qualification for human testing will follow.

Future Grant & Publication Plans

In addition to the NSF grant applications reported in **B1: Project Submissions/Approvals,** the following grant application to the National Institutes of Health is in preparation. Submission is anticipated for June, 2007:

Integrated surface electrical stimulation device for therapeutic applications

Clinical Relevance

Electrical stimulation has been recommended for treatment of chronic wounds however this therapeutic modality is limited by the technology currently available. The ISSD will provide a major new tool in wound care because it will allow patients to receive continuous ES therapy within the optimal wound healing microenvironment without further restricting mobility. A communications interface will allow clinicians to control and monitor therapy using readily available devices, such a laptop or PDA.

The ISSD will apply leading-edge technology and design to significantly advance the field of wound care with a novel medical device that is well accepted by both clinicians and users. Furthermore, the ISSD will have the potential to improve clinical care for many conditions that may require short- to medium-term therapeutic electrical stimulation.

On completion of pre-clinical testing using our animal model the goal is to carry out pilot clinical trials in collaboration with both the SCI/D and Podiatry Services of the Cleveland VAMC.

Project #4: Advances in Pressure Relief Technology Using Dynamic Materials

Principal Investigator: Kath Bogie, D.Phil.

Co-Investigators: Jeffrey Capadona, PhD. & Christoph Weder, PhD

Staff/Students: TBH

Description

The overall study objective is to develop a range of support surface devices, including wheelchair cushions and mattress overlays that will provide highly cost-effective pressure relief for individuals at increased risk of tissue breakdown.

The specific goal of this study will be to develop and test a prototype cushion that utilizes advanced dynamic materials to create a modular support device. The unique modular design of this system will allow for low-cost customization for individual seating requirements and provide the capacity for the cushion to be repaired rather then replaced, thus increasing durability and decreasing overall costs. Within the scope of the study the aims will be to:

Objectives

a. Characterize materials and develop designs for cost effective support surface device.
b. Design and fabricate prototype support surface devices for mechanical testing to investigate durability.

Research Plan & Methodology

Component materials for the proposed support device will be evaluated and prototype cushions assembled for qualitative evaluation of sitting comfort. Selected cushions will then be tested using standardized wheelchair cushion testing procedures.

Preliminary Results

This is a pilot study. No quantitative data have been obtained to date.

Milestones

Materials evaluation will be completed by early in 2007. Prototype cushions will be designed and undergo comprehensive biomechanical testing by the third quarter of 2007.

Future Grant & Publication Plans

The findings from this pilot study will be used in the development of a Merit Review Application to the VA in late 2007.

Clinical Relevance

Chronic wounds, including pressure ulcers and venous ulcers, are a leading cause of re-hospitalization for many veterans and are often associated with prolonged periods of hospitalization. This major secondary complication is also among the most common cause of morbidity in the patient populations cared for by the VA.

Prevention of pressure ulcers in veterans at-risk for tissue breakdown is integral to the goal to provide the highest standards of care for veterans. Novel techniques to improve the efficacy of this intervention, in particular pressure relief systems, are integral to developing advanced programs of care for at-risk individuals.

Project #5: Wireless Implantable Pressure Monitor for Clinical Applications

Principal Investigator: Margot Damaser, Ph.D.

Co-Principal Investigators: Darrin Young, Ph.D., & Steve Garverick, Ph.D.

Co-Investigators: Wen Ko, Ph.D., Graham Creasey, M.D., Hui Zhu, M.D., Sc.D., Kenneth J. Gustafson, Ph.D.,

Staff: Paul Fletter, B.S., James Buckett, M.S., Brad Boggs, M.S., Paul Zaszczurynski, B.S.,

Students: Steve Majerus

Description

Measurement of physiological pressures is fundamental to many forms of medical diagnosis and monitoring in cardiovascular, respiratory, gastrointestinal (GI), urological and other systems. One example is urodynamics, the measurement of bladder pressure to diagnose incontinence. Pressure is usually measured via catheters, either connected to transducers outside the body or more recently by micro-transducers mounted on the tip of such catheters. However, this requires that the catheters be inserted and maintained without infection and that the patient be tethered to a recording device. It would be a great advantage to continuously measure pressure using a miniature device that transmits wirelessly to an external receiver. Existing monitors are either passive devices, with no onboard power source and required to be near their external power source, or active devices with a battery onboard that are too large for our primary application in the bladder. A miniaturized, active device, or one with a creative wireless powering method, could be implanted in internal organs. Such a device could either be inserted into an internal organ or could be implanted endoscopically. This device would have application for many purposes including

diagnostic, monitoring, biofeedback, and as a mechanism to improve control of rehabilitative systems, such as those using functional electrical stimulation or neuromodulation. Since no such systems currently exist, this technology development project will result in a novel medical device that clearly serves an important, but yet unmet, clinical need.

Objectives

The objectives of this project are to design, fabricate, and test a wireless, implantable pressure monitor. The seed funds from APT center are being used for initial design and preliminary data experimentation.

Research Plan & Methodology

Research Plan: We have created a large prototype using PC Board technology and have tested it in a pressure chamber. We have also tested methods and devices for insertion of the device into the bladder. We have determined that salt water (to simulate the body) does not degrade transmission of the signal. We have used this data as preliminary data for a VA Merit Review proposal to build an appropriately sized prototype using integrated circuit technology.

Methodology: APT Center funding has enabled us to form an investigative team, formulate a research plan, and obtain the preliminary data needed to submit for external funding. We will continue to make progress toward the objectives above in the next year. In addition, APT Center funding will enable us to continue pursuing methods of inserting and implanting the pressure sensor in the bladder (the initial target organ).

Milestones

We have determined that bladder pressure measured submucosally reflects lumen pressure by placing a catheter with a custom latex diaphragm under the mucosa in a pig bladder placed in our ex vivo bladder testing apparatus. We have developed a large prototype using PC board technology and have tested in a pressure chamber. The results demonstrate high repeatability with low hysteresis. Fabrication of the device using an unpackaged pressure sensor, ASIC technology for the circuitry, and a different battery during the proposed project will significantly reduce the size of the device.

We have designed and tested an insertion tool to demonstrate implantation of a submucosal device into the bladder wall. We have demonstrated this concept in preliminary experiments inserting mock devices (i.e. steel pellets) into pig bladders ex vivo.

Clinical Relevance

The ability to *continuously* record pressures from within the body without catheters would have dramatic significance in many medical specialties. In intensive care units, besides eliminating inconveniences associated with tethering of patients by catheters, wireless implanted monitors have the potential to reduce catheter line infections and associated morbidity and mortality. Ambulatory monitoring, home monitoring, and telemedicine would be greatly enhanced by long term monitoring of pressure. In addition, pressure measurement could be used as feedback for biofeedback training and rehabilitation systems. This device would allow improved therapeutic control of many conditions such as urinary incontinence, pulmonary hypertension, chest pain of non-cardiac origin, and lack of bowel and bladder control due to spinal cord injury. The initial application to ambulatory urodynamics would have great significance for improving diagnosis and treatment of incontinence, which is endemic among the elderly.

The special features of the veteran population, such as traumatic injuries to the brain and spinal cord, increasing age, and prevalence of cardiovascular disease and diabetes suggest opportunities for improved monitoring and treatment of complications such as urinary and fecal incontinence, constipation, and pulmonary hypertension. As an example of relevance, 25% of the 250,000 people with spinal cord injuries in the U.S. are veterans and there are 10,000 people with new spinal cord injuries incurred each year. The aging veteran population includes many with disabilities as well as decreased bladder and bowel control, resulting in urinary and fecal incontinence. Continence and pelvic health are especially important to the health and well being for these at-risk segments of the disabled veteran population. The proposed device will improve the health and quality of life for disabled veterans by enabling new treatment interventions and diagnostic modalities that will improve their standard of care.

Project # 5: Wireless Implantable EMG Microsystem

Principal Investigator: Darrin Young, Ph.D.

Co-Investigator: Ronald Triolo, Ph.D.

Staff/Students: Bradley Farnsworth, B.S.

Description

This project focuses on developing a subcutaneously implantable sensing and telemetry microsystem for electromyographic (EMG) or myoelectric signals (MES) that can be interfaced with an external transceiver module, housed in or on a prosthetic socket. The prototype system will sense EMG signals from the muscles remaining in the amputated limb and transmit them out of the body to the external receiver for analysis and adaptive control. The external unit can also transmit RF power to the implanted system. Because commercially available myoelectrically controlled

powered prostheses rely on EMG signals acquired from the surface of the skin via recording electrodes embedded in the socket, they are prone to problems that can significantly degrade signal integrity and prosthesis performance. The microsystem configuration we are developing (tiny wireless sensing elements placed subcutaneously directly on the target muscles) should significantly reduce movement artifact and obviate other factors that are known to adversely impact the operation of myoelectric prostheses. In essence it will decouple the issues related to socket fit and alignment (including perspiration, variable contact with the skin surface, inability to utilize a liner, etc.) from issues related to EMG signal acquistion. The transcutaneous EMG sensing and telemetry microsystem is expected to substantially enhance the biomimetic performance of myoelectrically controlled powered prosthetic limbs for veteran amputees. The proposed prototype development can potentially be incorporated into existing upper and lower limb prosthetic systems.

Objectives

The objective of this project is to design and implement an implantable EMG sensing and telemetry microsystem, which can be interfaced with an external transceiver module housed in a residual limb-prosthetic socket.

Research Plan & Methodology

The electronic building blocks required for the proposed implantable wireless EMG sensing microsystem will be first designed and optimized using a computer-based circuit simulation program. The finalized design will be fabricated using a commercial complementary metal oxide semiconductor (CMOS) process with an estimated chip dimension of 2 mm x 2 mm x 0.3 mm. The completed chips will be first interfaced with existing implantable EMG electrodes. The electronic chip with an RF coil loop can be placed adjacent to the platinum electrodes to maintain flexibility in that region. Electrical connections will be formed by wire bonding of the IC and spot (or laser) welding of the stainless steel wires to electrically connected pads. The chip will be covered by epoxy and silicone before conducting animal implant studies. To eliminate the complexity associated with hand-made EMG electrodes and to improve the interconnect reliability between the electrodes and sensing electronics, microfabricated EMG electrodes will be made by using sputtered platinum thin film over flexible and biocompatible substrates such as polymer liquid crystal. The microfabricated EMG electrodes can be interfaced directly with the sensing electronics through flip-chip bonding of the IC, a technique well established and widely used in advanced semiconductor packaging. The packaged system will be protected by epoxy and silicone for further animal implant studies at the NEC at Case.

Figure 7: EMG sensor mock-up figure.

Preliminary Results

We have successfully characterized the wireless link for remote RF powering and data telemetry. RF power can be converted to achieve 2V/100 μA to supply the implantable electronics. Data telemetry with 2.5 Mbps has been demonstrated. These capabilities far exceed the requirements for the control of existing myoelectric limb prostheses.

Milestones

We plan to develop a fully functional prototype wireless implantable EMG sensing microsystem within one year. Once performance of the prototype is verified, we will package the device for implantation and initiate in vivo animal testing. This will be followed by interfacing the prototype circuitry to an existing myoelectric prosthesis, essentially substituting the microsystem for the socket-based surface recording. Finally, issues related to fabrication and qualification for human use will be addressed. Initial proof-of-concept anumal tests are planned for the Summer and Fall of 2007.

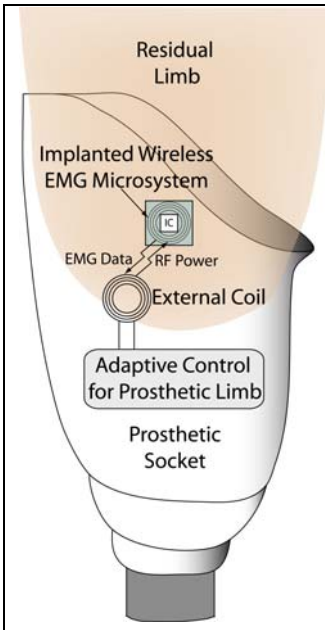

Figure 8: The implantable wireless EMG sensor will be powered by a radio-frequency signal transcutaneously from an external transceiver housed in a prosthetic socket as shown schematically in the figure.

Future Grant & Publication Plans

We plan to submit a research proposal focusing on developing implantable wireless EMG sensing microsystem for intelligent myoelectric control to the National Academies Keck Futures Initiative in early 2007 followed by an R21 grant submission to NIH later in the year. The research results will be published in BME conferences and related journals. Based on the research results, we will team up with another biomedical investigator to submit a research proposal on developing intelligent prosthetic control by using the implantable wireless EMG sensing microsystem to funding agencies such as NIH and VA.

Clinical Relevance

The proposed implantable wireless EMG sensors can be used for obtaining long-term reliable myoelectrical signals for various clinical applications, including real-time adaptive human motor behavior control, wireless machinery control, and injured muscle activity and condition monitoring. The proposed study is expected to demonstrate and produce prototype fully functional wireless implantable EMG sensor units. The study results and prototype systems will be used to substantially enhance the biomimetic performance of myoelectrically controlled powered prosthetic limbs for veteran amputees. The developed technology also can potentially be incorporated into existing upper and lower limb prosthetic systems in the VA health care system.

Project # 6: Design, Development and Fabrication of Polymer Microstructures

Principal Investigators: Christian Zorman, Ph.D., & Dustin Tyler, Ph.D.

Staff/Students: Jeremy Dunning, M.S., Allison Hess, B.S.

Description

The APT Center is currently pursuing the design and development of innovative technologies that will yield advanced polymer materials for neural interfaces, micro-electromechanical systems (MEMS) and implantable systems for biosignal acquisition and wireless transmission for the control of prostheses and other assistive devices. This particular effort proposes to merge two of these activities, namely advanced polymer materials and MEMS technology by developing polymer-based neuro-interface devices made using MEMS-based microfabrication techniques.

Objectives

To develop baseline fabrication techniques for polymer micromachining using the tool set in the Microfabrication Laboratory (MFL) at Case Western Reserve University for the fabrication steps and a neural electrode array structure as the demonstration vehicle.

Research Plan & Methodology

The methodology used in this study follows procedures commonly used to evaluate new MEMS materials. For this project, the materials of interest include liquid crystal polymer (LCP) and polynorbornene (PNB). For the LCP devices, structures were fabricated from commercially-available LCP sheets cut for mounting on Silicon (Si) wafers. Platinum (Pt) electrodes were fabricated on the base sheet, after which a cover sheet was thermally laminated onto the base. The cover sheet was then patterned and etched to reveal the final structure. Process development involved using a batch of wafers, some of which were extracted from the process sequence at various strategic points to evaluate key processing steps. Fabrication of PNB-based devices followed a process quite similar to conventional photoresist processing. This was possible because the formulation of polynorborene that we used is photodefinable. Process development in this case followed the same strategy used in LCP process development.

Preliminary Results

During this reporting period (2006) development of mechanically flexible, polymeric neural electrode devices focused on the development of an all PNB-based, stimulation and activity-sensing microdevice specifically designed for the flat interface nerve

electrode (FINE). A schematic of an electrode array designed for acute applications is shown in Fig. 9. This device is composed of ten thin film Pt electrodes each connected to a contact pad by a long (up to ~ 6.5 cm), flexible shaft. The contact pads mate with a standard Hirose FH-27 connector that enables interfacing to external electronics. A silicone housing (Fig. 10) positions two of these structures on opposing sides of a slightly compressed nerve. This particular array is sized for the human femoral nerve.

Figure 9: Plan-view of a PNB-based electrode array.

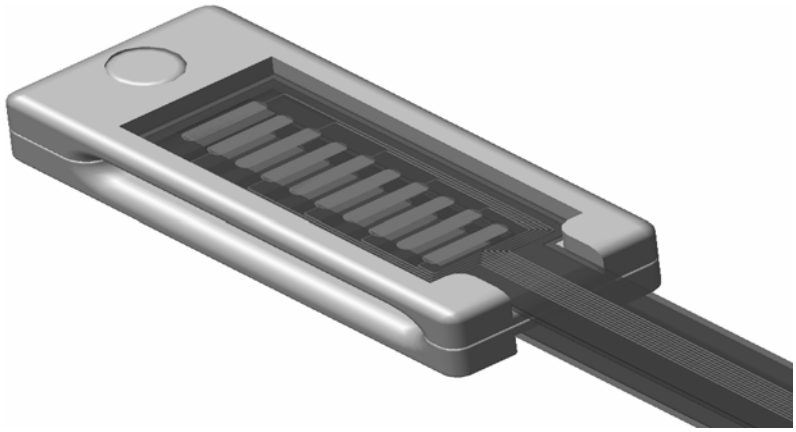

Figure 10: Three-dimensional illustration of two PNB-based arrays mounted in the silicone housing.

The electrode arrays are fabricated by spin-casting the thick base layer of PNB onto an oxidized wafer. The base layer is patterned with UV radiation, developed and cured. The contacts and traces are formed by negative tone photoresist, and sputter-deposition Pt. prior to lift off in an ultrasonic bath. A capping layer is then spin-cast, patterned to expose the contacts, developed and cured. Figures 11 and 12 show the arrays before and after release.

Figure 11: Photograph of unreleased PNB-based devices on a 100-mm diameter oxidized silicon wafer.

Figure 12: Photograph of released PNB-based devices.

Electrode arrays were subjected to a battery of tests to evaluate the electrical and mechanical viability of the structures. The effect of bending was examined by measuring the electrical resistance before and after wrapping an array around a 3.6 mm-diam. rod (Fig. 13). The average resistance of the flat electrode was 1100Ω while that for the curled electrode averaged 1116Ω ($p<<0.0001$, paired *t*-test). These numbers are comparable to conventional Pt-foil/stainless steel wire based electrodes, which range from 600-2000Ω. Finite element modeling (Fig. 14) predicted that the most probable point of failure is near the connector, a prediction borne out by the fracture of an array at that location during handling.

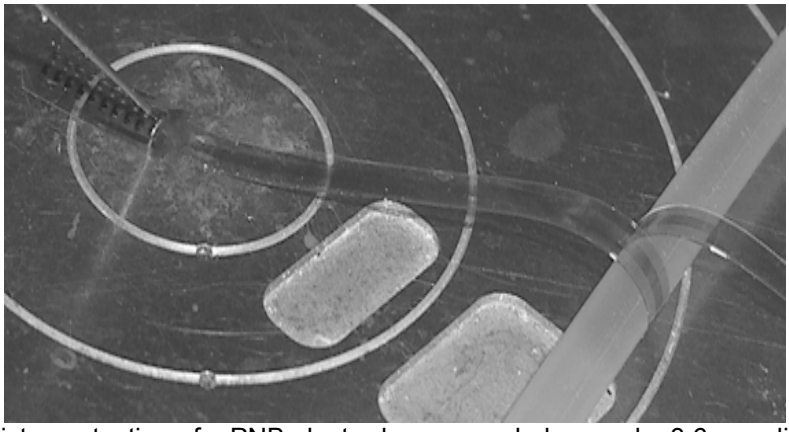

Figure 13: Resistance testing of a PNB electrode array curled around a 3.6 mm-diameter cylinder.

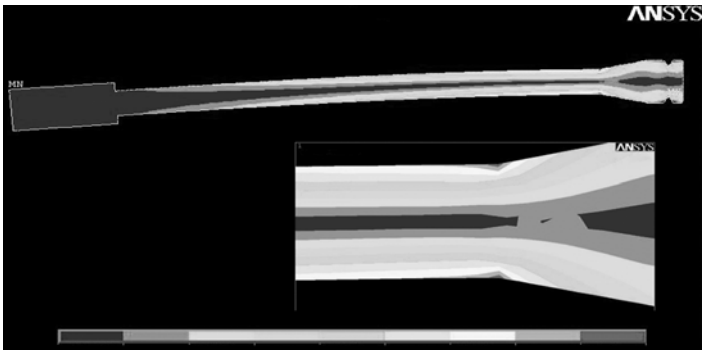

Figure 14: Finite element analysis of the device geometry, indicating high stress at the sharp corners of connector end.

Electrical resistance in solution was measured using a charge-balanced, biphasic 1 mA, 100μs current pulse applied by a standard stimulator to electrodes submerged in PBS. The voltage response was measured between the connector end and a strip of stainless steel foil placed at the opposite side of the container. The voltage waveform, shown in Fig. 15, indicates that the resistance of the electrodes in combination with the PBS is approximately 3000Ω.

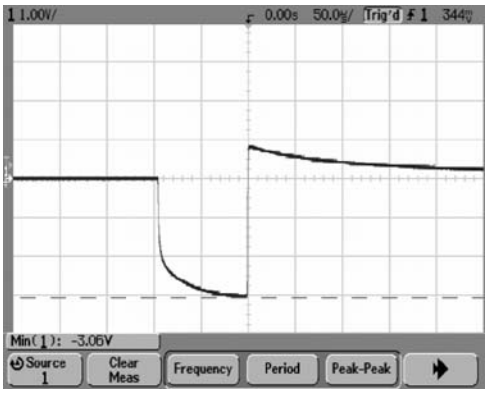

Figure 15: Voltage waveform used to determine the impedance of electrode in a phosphate-buffered saline (PBS) solution.

To characterize the moisture absorption characteristics of the PNB structural layers, interdigitated electrode structures (Fig. 16) were fabricated. Leakage current for a dry IDE was 0.08±2.13pA and increased to 0.88±2.04pA upon exposure to PBS.

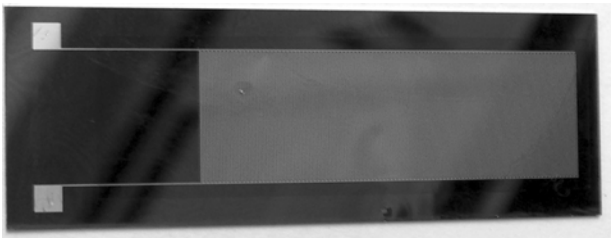

Figure 16: PNB-encapsulated interdigitated electrode device used for hermiticity testing of the PNB.

The extended paper will detail the electrode array design, process development and materials compatibility issues, mechanical reliability testing, chemical durability testing, packaging, and the results from an upcoming animal test.

Milestones

In collaboration with Prof. Tyler, we are currently conducting an extensive biocompatibility study of polynorbornene, the most comprehensive study of its type every conducted on PNB. The aforementioned fabrication work was completed by Allison Hess, a Ph.D. student in EECS at Case who is currently working on her MS thesis in concert with Jeremy Dunning of the APT Center. Ms. Hess has also completed of the first run on a PNB/LCP hybrid device. She has also initiated a study of the moisture absorption properties of silicon carbide.

Future Grant & Publication Plans

Publication submissions in 2007 include a paper summarizing the in vitro assessment of the cytotoxcicity of *PNB* targeted for the Journal of Biomedical Materials Research and a paper detailing the use of polynorbornene as a bioMEMS material targeted for Biomedical Microdevices. In addition, several conference presentations and seminars are planned for 2007. An invention disclosure is also in preparation.

Clinical Relevance

The work detailed in this report is clearly pre-clinical in nature as it involves new materials, methods and device designs that require rigorous evaluation at nearly all levels before they can be implemented at the clinical level. Nevertheless, the potential for such devices to make significant impact in the clinical setting in future systems is

tremendous, since these devices offer the advantages of small size, mechanical flexibility, and high electrode density. The devices are created using a batch fabrication technology that offers a very high level of reproducibility and high throughput, which could lead to considerable cost savings over conventional devices as the device technology is moved towards commercialization. The devices should prove to benefit research at the pre-clinical level as components in systems designed to understand neural systems using animal models, which in turn, lead to improved clinical systems.

Project #7: Stimulus-Responsive, Mechanically-Dynamic Nanocomposite for Cortical Electrodes.

Principal Investigator: Dustin Tyler, Ph.D.

Co-Investigators: Jeffrey Capadona, Ph.D., Christoph Weder, Ph.D., Stuart Rowan, Ph.D., Christian Zorman, Ph.D.

Staff/Students: James Harris, M.S.

Description

The proposed project will develop the first examples of a new class of polymer nanocomposites that reversibly and dynamically alter their mechanical characteristics in response to an external stimulus. While many polymers alter their mechanical properties, the proposed materials are novel in that they change in direct proportion to the stimulus and are reversible, hence can be controlled. These advanced polymeric materials are scientifically novel and are expected to significantly contribute to the development of many advanced devices and applications in medical technology. The first application targeted here is a “smart” substrate for cortical electrodes. The proposed polymer nanocomposites will be engineered to exhibit a high Young’s modulus, or stiffness, and tensile strength to facilitate implantation of the electrodes into the cortex. Once the device is in place, the material will respond to the chemical environment of the cortex, changing the Young's modulus to match the surrounding tissue and thus becoming “mechanically invisible” to minimize chronic tissue response.

This will be the first demonstration of a mechanically dynamic and reversible, chemo-responsive synthetic material that can change its stiffness on a physiological time scale. We will establish the basic macromolecular engineering principles and demonstrate their feasibility in an important first application that represents an intriguing “prototype” because it only requires a single switching event under very well defined conditions. The general design principles established in this project can then be extended to other biomedical applications in which the mechanical properties can be changed in a controlled and reversible manner.

Cortical electrodes have demonstrated their potential for significant improvement in human health and quality of life, but have not yet achieved a satisfactory mechanical or molecular match with cortical tissue for long-term use. By matching tissue mechanical characteristics, we intend to investigate whether the tissue response to the electrode can be reduced, thus providing a stable long-term interface with cortical neurons. In this application, the material is only required to change mechanical properties once, demonstrating the feasibility of a mechanically-dynamic material in a relatively straightforward system, paving the way for future development of devices with substantial clinical impact.

Objectives

a. *To fabricate mechanically dynamic, nanocomposite polymers*

The focus of this effort is to establish the basic chemistry and processing methods to produce the polymer nanocomposite, and understand its material composition and behavior. The specifications of the prototype material will be guided by its targeted use as a neuromimetic cortical electrode. This will require a material that is initially stiff to allow for insertion of the electrode into the cortex and rapidly changes to match the compliance of the cortical tissue.

b. *To determine biocompatibility and tissue response to nanocomposite*

The objective is to demonstrate and understand the *in-vivo* behavior of the materials as they are developed. These studies will be performed in parallel to drive the development of the nanocomposite based on *in-vivo* behavior of the material. We will test the hypothesis that a mechanically matched material will minimize the astrocytic response and improve the interface between the cortical neurons and the electrode.

Research Plan & Methodology

To accomplish the first objective, high-aspect ratio, nanoscale cellulose "whiskers" are harvested from tunicates. These fibers are chemically functionalized and have been dispersed in polymer substrates of either polyethelene-oxide, polycaprolactone, orpoly (vinyl acetate). As materials with varying mechanical properties are produced, these series of materials are characterized for their properties in the initial "stiff" configuration and "flexible" configuration after immersion in water or artificial cerebral spinal fluid (ACSF) at 37 ^{o}C over extended periods. The effect of material composition and processing on the range of modulus change that can be realized will be compiled, resulting in a catalogue of the most promising formulations.

To accomplish the second objective, the most promising nanocomposites will be implanted chronically in the rat cortex. The tissue response will be characterized using fluorescent immunohistochemistry and light microscopy tools. The durability of the polymer will be assessed by mechanical testing of removed components. At the end of the proposed studies, we expect to have preliminary data to support further development of a cortical electrode with electrical contacts.

Preliminary Results

To date, significant research efforts have been made towards the first objective of fabricating mechanically dynamic nanocomposite polymers, and have recently begun towards the *in vivo* evaluation of first generation dynamic polymer nanocomposites.

Stimuli-Responsive Filler-Filler Interactions: Our group has already established the procedures to isolate gram-quantities of cellulose whiskers. In preliminary experiments in which the cellulose whiskers were decorated with hydroxy and sulfate groups, the feasibility of chemo-mechanical switching of the filler-filler interactions has been unequivocally demonstrated.

Nanocomposite Fabrication: We have previously synthesized copolymer films containing cellulose whiskers that display approximately a 30-fold increase in modulus. The mechanism of modulus change in the nanocomposite is clearly related to coupling and decoupling of a whisker matrix and differs from a hydrogel, which expands the polymer matrix. This provides greater opportunity for engineering the modulus range and the switching mechanisms. While this interaction is both dynamic and reversible, it is important to note that the interactions shown in these preliminary experiments did not maximize the full potential of the nanocomposite system.

The above systems demonstrated high contrast in “stiff” and “soft” states, but the overall modulus values were orders of magnitude below the mechanical requirements for our application. In this preliminary system, the dynamic reinforcement was attributed to the presence and quantity of cellulose whiskers, but little effort was placed in the establishment of a homogeneous dispersion of the reinforcing agent within the polymer matrix. It has been demonstrated that the dispersion of whiskers throughout the entire matrix is essential to reach the full potential of the system. Based on this, we feel that we can achieve at least two-four orders of magnitude higher Young’s modulus, which would result in an estimated “stiff” modulus on the order of 10s of GPa. Additionally, we anticipate that this general processing scheme - with appropriate modifications - will be universally applicable to all of the proposed target materials.

We have developed two new experimental methods for the processing of nanocomposites composed of tunicate cellulose. The first method relates to the dispersion of cellulose fillers into a range of organic solvents. This development has been established for the first time, and a manuscript detailing the procedures has been accepted for publication in *Biomacromolecules*. The second method for the fabrication of tunicate cellulose nanocomposites, which will be submitted for publication in the near future, is a more elegant technique that has the potential of impacting a broader community beyond cellulose nanocomposites, and is not reported here for proprietary reasons.

Through the use of these newly established techniques, we have been able to develop cellulose nanocomposites with a plethora of polymer systems that have previously been incompatible with this technology. This has allowed us to develop composites with a wide range of mechanical properties. Additionally, use of this newly developed

method has increased the overall mechanical strength of composites of identical composition 10-fold compared to those fabricated with previous technology.

Furthermore, we have used these new techniques to incorporate cellulose whiskers into additional classes of polymers, expanded the potential mechanisms for mechanical switching. Our most recent class of dynamic nanocomposites demonstrates a multifaceted switching mechanism that requires the chemical environment of the body to alter the thermal properties of the polymer, in turn changing the mechanical properties at physiological temperatures. This most recently developed nanocomposite has proven to be "stiff" enough for inserting into the cortex of a rat, unlike the "state of the art" in polymer electrodes.

Milestones

We have successfully reached our milestones set on our last annual report, and have developed our first generation dynamic material for cortical electrodes which demonstrate a mechanical change in modulus over several orders of magnitude. Preliminary *in-vivo* testing is underway, and our fabrication team is designing advanced structures for cortical electrodes. These electrodes will be used for the full-scale animal trials to be conducted on first generation materials throughout 2007, and into the first quarter of 2008. These initial animal studies will demonstrate proof of concept, and will be the basis for design of second-generation dynamic materials.

The resources required to complete this work include a post-doc trainee and a graduate student to develop and explore the chemistry and synthesis of the nanocomposite material, constituent raw materials, testing instrumentation time. Additional resources are required for a second graduate student to characterize the materials *in vitro* an *in vivo*, and for the costs of animal trials, while a part of a third graduate student's time is required for developing the fabrication techniques to process the newly developed materials into relevant structures.

The resource required to complete this work are in place. The post-doc trainee working on this project has secured his own salary support in the form of the VA RR&D Career Development, Associate Investigator Award. The research team has also been awarded an R-21 Award from the NIH, which will cover operating costs, and salary/tuition support for two graduate students.

Future Grant & Publication Plans

An NIH - R21 proposal is currently funded. Upon successful completion of this APT Center pilot study, we will submit and R01 (Expected 10-07) for device development and animal trials using the new material. VA Merit Review funding and clinical trials are anticipated in 5-10 years.

These preliminary results will result in the preparation and submission of three manuscripts.

1. Nanoletters, *Mimicking Sea-cucumber's Skin: Mechanically-Dynamic, Stimulus-Responsive Nanocomposites*

This paper is in preparation, and will outline the synthesis and fabrication, as well as the mechanical testing and characterization of our dynamic nanocomposites.

2. Journal of Biomedical Materials Research, *In Vitro Evaluation of the Cytotoxicity of Mechanically Dynamic Cortical Implant Materials*

   This paper will be a summary of the *in vitro assessment of the cytotoxicity* of the novel nanocomposite material, as well as the *in vitro* assessment of the electrode insertion into mimetic brain tissue (gelatin).

3. To be determined, *In Vivo Evaluation of the Mechanically Dynamic Cortical Implant Materials*

   This paper will summarize the *in vivo* evaluation of the acute and chronic implant studies with electrodes fabricated from our nanocomposites.

Clinical Relevance

This development effort is highly significant as there is an unmet need for mechanically-dynamic material, which will enable development of a wide range of biomedical devices that will significantly and positively impact Veteran care. Such applications could include dynamically compliant stress transducers, orthopaedic and prosthetic devices with controllable joint stiffness, conformal matching of socket mechanical properties, neuromimetic electrodes for neural interfaces, obstructive sleep apnea (OSA) devices that dynamically stiffen the airway at night and are compliant during the day, implants for erectile dysfunction, vocal fold implant to stiffen paralyzed folds for speaking and open the folds for breathing, dynamic loading elements in implants, dynamic implantable connectors with minimal stiffness to connect and disconnect and rigid to prevent disconnect, and biodynamic sensors. Further, this material will allow other investigators to devise many new and as yet unimagined applications.

Project #8: Enhancing Neuroprosthesis Performance with Nerve Cuff Electrodes

Principal Investigator: Ronald J. Triolo, PhD.

Co-Investigator: Dustin Tyler, Ph.D.

Staff/Students: Benjamin Cottrill, Matthew Schiefer

Funding Agency: National Institutes of Health

Description

Selective activation of individual fascicles of the peripheral nerve is a critical element of many therapeutic and restorative interventions for individuals with motor, sensory and limb loss. Currently available muscle-based stimulating electrodes offer gross selectivity at the expense of stimulating current, surgical time and complete activation of the targeted

neural structures. Nerve cuff electrodes can expedite surgical installation and guarantee more complete activation at low levels of stimulating current, but to date have not been able to produce isolated responses of individual fascicles within complicated compound nerves and application has been limited primarily to nerve branches serving only a small number of muscles. This project addresses the need for selective activation of peripheral nerves by optimizing the design of flat interface nerve electrodes (FINE) for application to the human femoral nerve. The project builds upon earlier animal and human cadaveric studies to optimize the geometry and location of multiple contacts within the lumen of a FINE electrode to separate individual components of the femoral nerve and isolate knee extension from hip flexion. The outcome will eventually improve the performance of existing neuroprostheses for standing and enable new neuroprostheses to be developed for stepping after paralysis. The methodology developed for this project progressing from a) quantitative neuroanatomical studies to b) computer modeling and simulation through c) intraoperative testing and d) device fabrication can be generalized for future studies on a wide variety of clinical applications.

Objectives

The primary technical objective of this investigation is to optimize the design of stimulating nerve cuff electrodes to selectively activate desired fascicles within the human femoral nerve. This is being accomplished by generating realistic models of cuff-nerve geometry and determining the fascicular selectivity of multi-contact cuff electrodes via computer simulation analyses. This will result in an optimized cuff design that maximizes selectivity without detailed a priori knowledge of the fascicular structure of the nerve for any particular individual. The final goal of this project is to establish the acute performance of resulting multi-contact cuff electrodes in a series of intra-operative tests to verify the design and prepare to manufacture and transfer the devices to other collaborating centers for chronic clinical trials

Preliminary Results

To date, quantitative anatomical studies have provided cross-sectional data revealing the fascicular structure of the human femoral nerve. This has allowed the innervation patterns and morphology of the nerve to be documented in order to obtain design parameters for nerve cuff location and size. Cross sections of the femoral nerve near the inguinal ligament reveal a regular structure with hip flexors usually segregated to the superior and

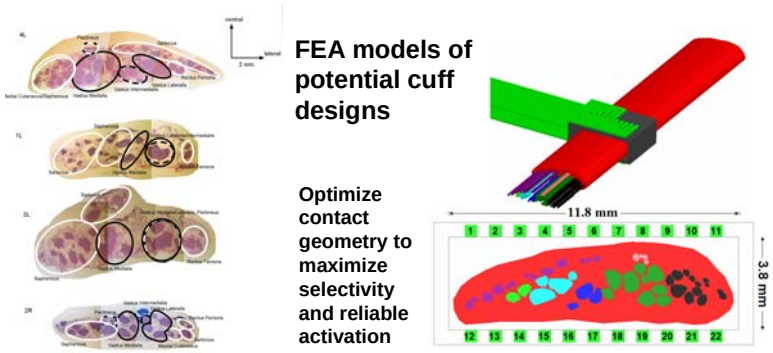

Figure 17: Quantitative cross sections of proximal femoral nerves from four specimens (left) and generalized finite element analysis (FEA) model of a generalized nerve to optimize design of a flat interface nerve electrode (FINE).

medio-lateral portions of the nerve, while fascicles serving the uniarticular vasti group that produce only knee extension are generally located inferiorly and centrally. These serial cross sections were digitized and processed to reconstruct a three dimensional representation of the nerve in potential areas for deploying electrodes. The resulting geometries were used to construct finite element models of the nerve and a surrounding FINE electrode as shown in Figure 17. The resulting computational model allows us to predict which fascicles (muscle groups) can be activated by a current applied to a contact placed at a specific location within the lumen of the FINE.

Recruitment benefit (the ability to activate axons serving desired muscle groups) and recruitment cost (number of axons serving undesired muscle groups) are calculated to determine the selectivity of individual contacts. The electrode design is being optimized by calculating the selectivity of each of 22 contacts in the electrode for cross sections derived from various individuals. Finally, we assessed the functional implications of each design by using a previously validated commercial package for musculoskeletal modeling to compute the muscle forces and joint moments that would be produced by activating the same percentage of each muscle as predicted by the neural simulations.

For a given number of contacts, FINEs with smaller opening heights generally outperformed FINEs with larger opening heights. The highest density FINE examined in this analysis contained 22 contacts distributed evenly across the upper and lower cuff surfaces. As expected, this configuration also exhibited greater selectivity than all other designs. At a 1.4 mm opening height the 22-contact FINE was able to isolate and selectively activate each of the six muscles innervated by the femoral nerve, regardless of the cross sectional model used in the analysis. The electrode could also produce knee extension moments that would be sufficient for the sit-to-stand transition and 70% of the hip flexion moment needed for walking. Using two stimulating contacts per muscle further increased both selectivity and resultant joint moments.

Further simulations indicate that an **8-contact** FINE represents an acceptable tradeoff between the competing design goals of minimizing system complexity and maximizing muscle selectivity. A configuration with four evenly spaced contacts offset from each other on each of the upper and lower halves of the cuff was almost as selective as the 22-contact FINE and capable of generating nearly as much knee and hip extension moment. These results were robust over all nerve models, and the configuration represents a practical alternative that appears to be generalizable even in the presence of individual variability. Every contact was used in at least one cross section model to isolate the fascicles of interest, indicating the economy of the design. Selectivity and joint moment output degraded significantly for all configurations utilizing less than eight contacts. Simulations confirm that performance of the electrode could be further improved by allowing single contacts to recruit synergistic muscles, thus reducing the number of targets from six individual muscles to two functional groups (hip flexors and knee extensors).

Results to date indicate that 8 contacts placed at specific locations within the nerve cuff will allow hip extension to be separated from hip flexion in a majority of nerve specimens. These results imply that FINE nerve cuff electrodes of optimal design should allow both standing (knee extension without hip flexion) and walking (hip flexion without knee

extension) from a single site on the proximal femoral nerve, rather than individual electrodes for each muscle, thus greatly improving surgical efficiency and neuroprosthesis functionality.

Based on the design parameters derived from our cadaver and computer simulation studies, a clinical-grade 8-contact FINE has been fabricated that is suitable for human implantation (see **Figure 18**). All fabrication methods, materials and suppliers were qualified under a formal design control process to comply with FDA requirements. A cuff opening 10 mm by 1.5 mm was realized to coincide with our cadaveric and intraoperative measurements and theoretical analyses. Platinum foil contacts and leads were fabricated in our Technical Development Laboratory at Case and integrated into the body of the FINE by Point Medical Corp. (Crown Point, IN), a silicone rubber OEM specialist for medical devices. These devices are being prepared for intraoperative testing during routine clinical procedures that expose the proximal femoral nerve at the level of the inguinal ligament. The results of the intraoperative tests will drive the production of FINE electrodes for this application and their transfer to other Centers of Excellence for chronic human implantation and clinical testing.

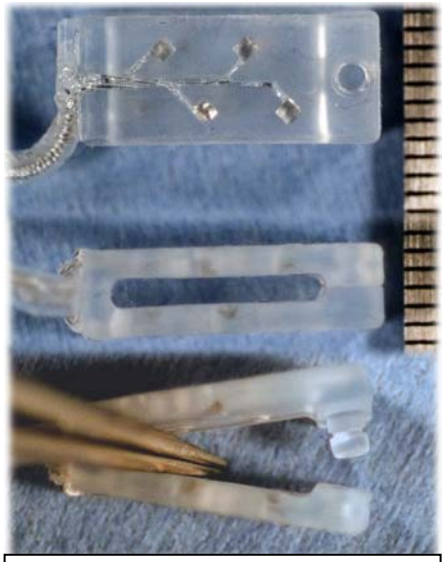

Figure 18: Human quality 8-contact FINE.

Milestones

Major project milestones accomplished this reporting period include a) completing theoretical optimization of the electrode design in simulation and b) production of human-grade FINE electrodes. Milestones for next year include intraoperative testing of the 8-contact FINE, preparation of a complete design dossier and Device Master Record to FDA, and initial quantitative analysis of the human sciatic nerve to replicate the design process.

Future Grant & Publication Plans

Five publications are in preparation describing various aspects of this project, including methodology for assessing selectivity, modeling and optimal design, and the intraoperative test results. NIH support for this project is due to expire and a competitive continuation application is being prepared to extend and complete the project.

The manuscript for the publication of FEA simulation results is being prepared and should be finalized in 2007. Multi-contact testing of FINE electrodes intra-operatively is scheduled to take place in early 2007. Testing of the FINE electrode intends to enroll 5-10 subjects while the infrastructure is in place the actual testing will take place soon. The preparation and submission of the R01 renewal is planned for the upcoming year.

Clinical Relevance

The design and fabrication of new neural interfaces like this one will extend the capabilities of systems for restoring lower extremity function after paralysis. The nerve-based approaches we are developing offer distinct advantages over current muscle-based electrodes used in neuroprosthetic systems, including the ability to completely recruit the target muscles and increase the forces and resulting joint moments available to move the extremities, support body weight, and resist disturbances. Careful design of these new neural interfaces to insure their selectivity will also significantly simplify implant surgery while expanding the repertoire of movement options available to neuroprosthesis users. Completion of this project will represent a significant advancement in the state-of-the-art of motor system neuroprostheses. The new neural interfaces and technology that will result should enable numerous neuroprosthetic interventions in spinal cord injury, stroke and other paralyzing conditions. Just as importantly, selective activation of individual muscles from a single multicontact cuff electrode around a proximal nerve trunk will simplify surgical installation of these systems.

Project #9: A Hybrid Neuroprosthesis

Principal Investigator: Ronald J. Triolo, PhD.

Staff/Students: Thomas Bulea, Jonathan Sakai, John Schnellenberger, Curtis To

Funding Agency: Department of Defense

Description

The purpose of the proposed research is to develop and evaluate a novel hybrid orthosis system consisting of an innovative trunk-hip-knee-ankle-foot orthosis (THKAFO).This project focuses on the design and development of novel hip, knee and ankle joint mechanisms that can be locked and unlocked rapidly during the appropriate phases of the gait cycle. In particular, technical development is concentrated on a new hydraulically actuated hip coupling mechanism that allows step length to vary with walking speed. This variable coupling between stance and swing limb hip angles is an innovation unique to this orthotic design. Secondarily, the project addresses trunk stability by exploring new configurations of segmental joints within a thoracic jacket to allow the trunk to be stiffened during walking, and remain flexible while seated. Thirdly, new magneto-resistive joints are being developed for the knees to allow the brace to lock and unlock smoothly without the backlash of conventional mechanical joints.

Preliminary Results

To date, prototypes of the variable coupling hip reciprocating mechanism have been developed and are being bench tested, as illustrated in **Figure 19**. Initial versions of the new trunk control mechanism and magneto-resistive knee joints are currently being fabricated. The results of this design and development effort should yield fundamentally new ways of allowing brace users to interact with their assistive devices. These efforts have already resulted in two invention disclosures to Case Western Reserve University and the Department of Veterans Affairs regarding aspects of the new hip and knee mechanism designs.

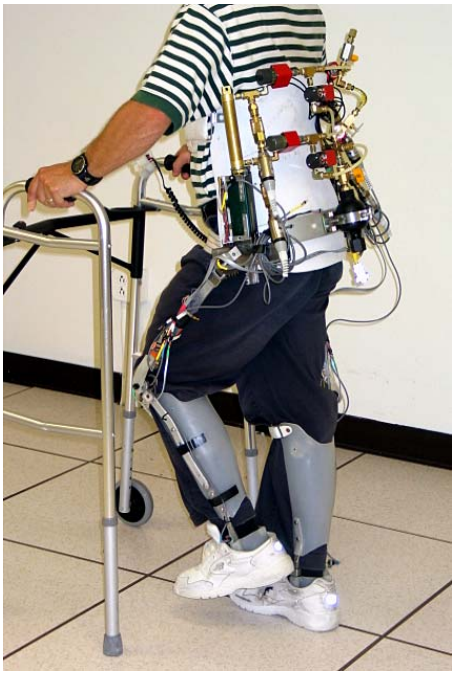

Figure 19: Prototype hydraulic hip reciprocating mechanism.

Clinical Relevance

Immobility remains a major problem for disabled veterans. Current orthotic options hinder walking velocity and stair climbing and restrict reciprocal stepping to a single stride length. Components of the advanced orthoses being developed in this project have the potential to impact individuals with mobility impairments resulting from a wide variety of disorders. The trunk component is unique with the potential to help individuals with scoliosis, spinal instability or paralysis resulting from musculoskeletal or cerebrovascular insult.

Future Grant & Publication Plans

In the upcoming year we intend to achieve many goals to improve and finalize this project. We will perform bench testing on MR-fluid based knee locking mechanism. In addition we intend to design, fabricate, and implement circuitry for controlling knee-locking mechanism. Once this step is completed modeling and design of knee mechanism data will be submitted for publication. The project will also incorporate knee-locking mechanism into a RGO. Bench test trunk mechanism and incorporate into hybrid orthosis as well as developing and testing a new version of ankle mechanism.

Milestones

This year we have revised the prototype him reciprocating mechanism several times to improve mechanical performance, fit and reliability. Initial able-bodied testing has been completed, as well as an upgrade to the controller hardware circuitry. In the coming year, we will initiate testing of the hip reciprocator with individuals with SCI, complete bench testing of the new knee mechanism, and fabricate a prototype flexible trunk mechanism.

Project #10: Prosthetic Arm Control for Amputees

Principal Investigator: Robert Kirsch, PhD.

Co-Investigators: R. Triolo, D. Tyler

Funding Agency: Department of Defense

Description

This project was initiated on September 1, 2006 and focuses on improving the control interface between the user and his/her upper limb prosthetic device through the application of new platform technologies being developed by the APT Center. The purpose of the project is to evaluate the significance of interfacing with the intact nervous system to improve control of a powered prosthesis and provide sensory feedback to the user. It should result in more natural movements of existing myoelectric prostheses through a new high performance neural interface.

Objectives

This project intends to construct a prosthesis simulator to accurately represent the mechanical action of the prosthetic arm and the user's attempts to control it. It will also develop a percutaneous EMG-based controller and interface it with an existing myoelectric prosthesis. The system should be able to test selective peripheral nerve stimulation for sensory augmentation. We aim to design components of an advanced prosthetic arm utilizing implanted neural interfaces. As well as deploying a permanently implanted system for sensory augmentation via selective peripheral nerve stimulation

Research Plan & Methodology

A model-based arm simulator will be used to provide both a training system for prosthesis users, and to assess the improvement made by advanced control and feedback techniques. We will adapt a fully implanted EMG recording and telemetry system that is being developed for neuroprosthesis applications for use in controlling upper extremity prostheses for transhumeral amputees. The use of implanted technology will greatly simplify system donning by the user and overcome the inherent limitations of surface EMG recordings. The use of 4-8 EMG recordings and a more sophisticated pattern detection algorithm will provide a much more transparent and effortless control interface for the user that will allow at least three degrees of freedom to be controlled simultaneously.

We will integrate the new implanted EMG system into existing multi-DOF upper extremity prosthesis, provide this to a number of individuals with transhumeral amputations, and evaluate its performance. We will also adapt existing implantable stimulators and FINE electrode technology being developed by the APT Center to deliver relevant sensory information derived from an instrumented prosthesis to the nervous system through

stimulation of the appropriate sensory components of peripheral nerves that once served the arm.

Clinical Relevance

The proposed effort is to develop a prosthesis system that would provide a more functional prosthesis for transhumeral amputees. The prosthesis would increase the chance of retention of active duty military for combat amputees, continued military career opportunities, and overall increased well being.

1. Project Milestones

Project Milestones are incorporated into each project progress note above.

C. CAPACITY BUILDING

The APT Center has 42 total members, including 14 undergraduate, graduate, and post-doctoral trainees. Eleven (11) are APT researchers, 7 are researchers with joint appointments. Of our 18 researchers, 9 are in mentoring programs. The support staff totals 10. New members were added in all categories as this is our second year of operation.

1. Current APT Center Staff

Category	Last Name	First Name	Degree	Position
APT Investigators	1. Capadona	Jeffrey	Ph.D.	Associate Investigator
	2. Damaser	Margot	Ph.D.	Investigator
	3. Garverick	Steven	Ph.D.	Investigator
	4. Mohseni	Pedram	Ph.D.	Investigator
	5. Potkay	Joseph	Ph.D.	Post-doctoral Fellow
	6. Rimnac	Clare	Ph.D.	Investigator
	7. Rowan	Stuart	Ph.D.	Investigator
	8. Stahl	John	M.D., Ph.D.	Medical Consultant
	9. Weder	Christoph	Ph.D.	Investigator
	10. Young	Darrin	Ph.D.	Investigator
	11. Zorman	Christian	Ph.D.	Investigator

Category	Last Name	First Name	Degree	Position
Joint Appointments	1. Bogie	Kath	D. Phil.	Investigator
	2. Creasey	Graham	M.D.	Medical Director
	3. Ho	Chester	M.D.	Medical Consultant
	4. Kilgore	Kevin	Ph.D.	Associate Director
	5. Kirsch	Bob	Ph.D.	Investigator
	6. Triolo	Ronald	Ph.D.	Center Director
	7. Tyler	Dustin	Ph.D.	Associate Director
Staff	1. Bartlett	Arden	M.S.	IT Specialist
	2. Boggs	Brad	M.S.	Senior Engineering Manager
	3. Burger	James	B.S.	Quality Systems Manager
	4. Dunning	Jeremy	M.S.	Engineering Staff
	5. Fletter	Paul	B.S.	Engineering Staff
	6. Hounshell	Jessica		B.A. Student
	7. Iveljic	Suzana	M.B.A.	Director of Operations
	8. Lugo	Wildalí	B.A.	Program Assistant
	9. Schnellenberger	John	M.S.	Engineering Staff
	10. Zaszczurynski	Paul	B.S.	Engineering Staff
Trainees	1. Arguello	Edward	B.S	MS. Student
	2. Bulea	Thomas	B.S.	M.S. Student
	3. Farnsworth	Bradley	B.S.	M.S. Student
	4. Fetty	Eric		B. S. Student
	5. Harris	James	M.S.	Ph.D. Student
	6. Hess	Allison	B.S.	M.S./Ph.D. Student
	7. Howe	Daniel	B.S.	M.S. Student
	8. Keesara	Varun	B.S.	M.S. Student
	9. Lachut	Derek		B.S. Student
	10. Majerus	Steve	B.S.	M.S. Student
	11. Schiefer	Matthew	B.S.	Ph. D. Student
	12. Shanmuganathan	Kadhiravan	M.S.	Ph.D. Student
	13. To	Curtis	B.S.	Ph.D. Student
	14. Whitney	Adam	M.S.	Ph.D. Student

2. *OOA Pre-Doctoral Fellows*

N/A

3. *Career Development Awardees*

Name: Tyler, Dustin J.
Dates: 2006 - 2010
Award: Nord Distinguished Assistant Professor, Case School of Engineering

Name: Rowan, Stuart J., Ph.D., NSF Career Award
Dates: 2002-2007
Award Amount: $600,500

4. *Research Career Scientists*

Name: Damaser, Margot S., Ph.D., Louis Stokes Cleveland VA Medical Center
Dates: 10/1/2004-9/30/2009
Award Amount: $306,250

Name: Triolo, Ronald J., Ph.D., Louis Stokes Cleveland VA Medical Center
Dates: 10/1/2002-9/30/2007
Award Amount: $306,250

5. *Other Research Fellow Programs*

A. Post-doctoral

(1) **Capadona**, Jeffrey Ph.D.
Mentor(s): Dustin J. Tyler, Ph.D.; Christoph Weder, Ph.D.; Stuart J. Rowan, Ph.D.; Ronald J. Triolo, Ph.D.
Project Title: Stimulus-responsive, mechanically-dynamic nanocomposite for cortical electrodes

B. Pre-doctoral

(2) **Arguello**, Edward
Mentor: Dustin J. Tyler, Ph.D.
Project Title: Regeneration enabled FINE Electrodes

(3) **Bulea**, Thomas
Mentor: Ronald J. Triolo, Ph.D.
Project Title: A Hybrid Neuroprosthesis

(4) **Farnsworth**, Bradley
Mentor: Darrin Young, Ph.D.
Project Title: Wireless Implantable EMG Microsystem

(5) **Fetty,** Eric
Mentor: Dustin J. Tyler, Ph.D.
Project Title: Development of Rapid Prototype Processes for Fabrication of Implanted Devices

(6) **Harris**, James
Mentor: Dustin J. Tyler, Ph.D.
Project Title: Stimulus-responsive, mechanically-dynamic nanocomposite for cortical electrodes

(7) **Hess,** Allison
Mentor: Christian A. Zorman, Ph.D.
Project Title: Design, development and fabrication of polymer microstructures

(8) **Howe**, Daniel
Mentor(s): Kath Bogie, D.Phil, Steven Garverick Ph.D
Project Title: Integrated surface electrical stimulation device for therapeutic applications

(9) **Keesara,** Varun
Mentor: Christian A. Zorman, Ph.D.
Project Title: Design, development and fabrication of polymer microstructures

(11) **Lachut,** Derek
Mentor: Dustin J. Tyler, Ph.D.
Project Title: Development of Rapid Prototype Processes for Fabrication of Implanted Devices

(12) **Schiefer,** Matthew
Mentor(s): Dustin J. Tyler, Ph.D., Ronald J. Triolo, Ph.D.
Project Title(s): A. Enhancing Neuroprosthesis Performance with Nerve Cuff Electrodes.
B. Development of an optimized FINE for standing/walking neuroprosthetic systems.

(13) **Shanmuganathan,** Kadhiravan
Mentor: Christoph Weder, Dr. Sc. Nat.
Project Title: Stimulus-responsive, mechanically-dynamic nanocomposite for cortical electrodes

(14) **To,** Curtis
Mentor: Robert F. Kirsch, Ph.D. and Ronald J. Triolo, Ph.D
Project Title: Automated variable reciprocating hip mechanism for a hybrid orthtosis system to facilitate assistive gait in individuals with spinal cord injury.

(15) **Whitney,** Adam
Mentor: Kath Bogie, D. Phil
Project Title: Development of an in-vitro model of electrical stimulation for wound healing

C. Faculty Fellowships

(16) **Zorman,** Christian
Fellowship: NASA Summer Faculty Fellow, NASA Glenn Research Center

6. Advisory Board Members –

As noted in **Section A.3 Future Goals and Objectives**, *Stakeholder Meetings* consisting of representatives from the Department of Veterans Affairs (the ACOS of Research and Chief of Spinal Cord or Rehabilitation Medicine Services) and the Chairs of the affiliated academic departments of the Case Schools of Engineering and Medicine will be empanelled to assist the senior leadership of the Center with continuing program evaluation. A formal, written report detailing an objective assessment of the performance of the Center in achieving its goals will be generated by the body on an annual basis. We are targeting our first meeting in Q3 2007.

An External Advisory Board will be pulled together as needed to advise us on specific research objectives. Potential members of the advisory board could include representatives from the medical device industry, prosthetics/orthotics industry, and scientists with parallel interests or needed expertise.

E. INFORMATION DISSEMINATION –

APT Center investigators and staff contributed to 23 peer-reviewed journal articles which appeared or were accepted for publication in 2006. 34 additional manuscripts were submitted or were under revision during the same reporting period. The Center also produced 65 presentations, conference abstracts, posters or platform lectures in 2006, and Center investigators participated in the organization and conduct of 2 national and international workshops and scientific or clinical conferences. These activities complement our own efforts at sponsoring internal seminars and Neuroprosthesis Seminars for external speakers. Our investigators filed **2 new invention disclosures** during the reporting period for APT Center related technologies. Furthermore, APT Center members were active in 13 community activities and 2 media releases. All of these activities are summarized below.

1 – Presentations

1. **Bogie K**, Howe D, Dunning J, Garverick SL, Zorman CA: Integrated surface electrical stimulation device for wound therapy applications, *Advanced Technology Applications for Combat Casualty Care 2006,* St Petersburg, Florida August 2006.
2. Howe D, Dunning J, Garverick SL, Zorman CA, **Bogie K**: Integrated Surface Electrical Stimulation Device for Therapeutic Applications *Research ShowCASE 2006, Case Western Reserve University, Cleveland, OH,* April 2006.

3. Wang X, Sun J, **Bogie K**. Mining Huge-p-Small-n Data and New Image Registration Procedures, 2005 Proceedings of the American Statistical Association, Biometrics Section, Alexandria, VA: American Statistical Association: *To be published.*
4. **Bogie K**, Wound care: Novel programs for clinical care and early intervention. *Evidence-based Practice in Wound Care*, Cleveland, Ohio September 2006.
5. Tyler D J, Weder C, Rowan SJ, and **Capadona JR** Stimulus-responsive, Mechanically-dynamic Nanocomposite for Cortical Electrodes. 2006 Materials Research Society Spring Meeting. San Francisco, CA. 2006.
6. **Capadona JR**, van den Berg O, Harris JP, Weder C, Rowan SJ, and Tyler DJ. Biomimetic Mechanically-Dynamic Nanocomposites for Cortical Electrodes. *Neural Interfaces Workshop,* Besthesda, Maryland, September 2006.
7. **Capadona JR**, van den Berg O, Harris JP, Weder CH, Rowan SJ, and Tyler DJ, Biomimetic Mechanically-Dynamic Nanocomposites for Cortical Electrodes, *Neural Interfaces Workshop*, Bethesda, MD; August 2006.
8. **Capadona JR,** Harris JP, Rowan SJ, Tyler DJ, and Weder C. Mechanically-Dynamic Biomimetic Nanocomposites. *Research ShowCase*. Cleveland OH, April 2006.
9. **Capadona JR,** Harris JP, Rowan SJ, Weder C, and Tyler DJ. Stimulus-Responsive, Mechanically-Dynamic Nanocomposites For Cortical Electrodes *Neural Engineering and Rehabilitation Day*. Cleveland, OH. 2006.
10. Van den Berg O, Weder C, and **Capadona JR.** Preparation of electrically conducting nanocomposites based on tunicate cellulose whiskers. 232nd Annual American Chemical Society Meeting & Exposition. San Francisco, CA. 2006.
11. Harris JP, **Capadona JR**, Rowan SJ, Weder C, Tyler DJ. Physiological Environment Responsive Nanocomposites. 29th Annual Biomedical Graduate Student Symposium. Cleveland, OH. 2006.
12. Petrie TA, **Capadona JR,** and García, AJ**.** Fibronectin-mimetic Surfaces Directing $\alpha_5 ß_1$ Integrin-Mediated Adhesion, Signaling, and Proliferation*. Society For Biomaterials (SFB). Pittsburgh, PA. 2006.*
13. **Damaser, MS. – Panel Moderator & Organizer,** *New Techniques for Monitoring and Diagnosing Voiding Function.* Engineering and Urology Society Meeting, Atlanta, GA, May 2006. This panel included 1 talk on *Novel methods of Bladder Volume Measurement,* which was given by Dr. Yachia, a collaborator on our project since Dr. Damaser was moderating.
14. Gill BC, Fletter PC, Zaszczurynski PJ, Perlin A, Yachia D, Butler RS, **Damaser MS**. Development of a Device for Intravesical Measurement of Bladder Volume. Presented at *Research ShowCase*, Cleveland, OH. April 6, 2006.
15. Fletter PC, Gill BC, Zaszczurynski PJ, Perlin A, Yachia D, Butler RS, **Damaser MS**. Intravesical Bladder Volume Measurement: Device Design And Testing. *J Biomechanics, Abstracts of the 5th World Congress of Biomechanics,* Munich, Germany. 29 Jul- 4 Aug 2006. 39(suppl 1), p. S636.

16. Gill BC, Fletter PC, Zaszczurynski PJ, Perlin A, Yachia D, **Damaser MS**. Fluid Volume Conductance for Determination of Bladder Volume. Presented at *3rd IEEE-EMBS International Summer School and Symposium on Medical Devices and Biosensors (ISSS-MDBS 2006)*. Boston, MA. Sept 5, 2006.
17. **Ho CH.** A Novel Topical Oxygen Treatment for Chronic Difficult-to-heal Wounds – *American Paraplegia Society 50th Annual Conference*, Las Vegas, NV. Sept. 2006.
18. **Mohseni P**. "Single-chip wireless microsystems for multichannel neural biopotential recording," *Neuroengineering Now @ Univ. of Texas-Dallas*, Dallas, TX, June 26, 2006.
19. **Rowan SJ**, Controlling Nanoscale Assembly using Ditopic Nucleobase-containing Monomers Rocky Mountain Regional ACS Meeting, Tucson, Arizona Oct. 2006.
20. **Rowan SJ**, Controlling Nanoscale Assembly using Ditopic Nucleobase-containing Monomers. North East Regional ACS Meeting, Binghamton, New York. Oct. 2006.
21. **Rowan SJ**, Supramolecular Polymerizations: From Dynamic Chemistry to Dynamic Materials Department of Chemistry, SUNY Fredonia. Sept. 2006.
22. **Rowan SJ**, Investigating Different Aspects of Supramolecular Polymerizations. Department of Chemistry, University of Nijmegen, Netherlands. Sept. 2006.
23. **Rowan SJ, Investigating** Different Aspects of Supramolecular Polymerizations. Department of Chemistry, Eindhoven Institute of Technology, Netherlands. Sept. 2006.
24. **Rowan SJ**, Controlling Nanoscale Assembly using Ditopic Nucleobase-containing Monomers. American Chemical Society Meeting, San Francisco, USA**.** Sept. 2006.
25. **Rowan SJ**, Responsive metallo-supramolecular polymers and gels. American Chemical Society Meeting, San Francisco, USA. Sept. 2006.
26. **Rowan SJ**, Supramolecular Polymerizations: From Dynamic Chemistry to Dynamic Materials.St Andrews University, Scotland. Aug. 2006.
27. **Rowan SJ,** Supramolecular Gels: Toward an Understanding of Small Molecule Gelators. Noveon Cooperation, Ohio. July 2006.
28. **Rowan SJ,** Supramolecular Polymerizations: From Dynamic Chemistry to Dynamic Materials. ACS Polymer Biennial 2006, Miami. May 2006.
29. **Rowan SJ,** Stimuli-Responsive Supramolecular Polymers: Investigating how molecular and nano-scale organization affects macroscopic properties. Nanotech 2006, Boston. May 2006.
30. **Rowan SJ**, Supramolecular Polymerizations: From Dynamic Chemistry to Dynamic Materials. Department of Chemistry, Williams College. April 2006.
31. **Rowan SJ,** Supramolecular Polymerizations: From Dynamic Chemistry to Dynamic Materials. Department of Chemistry, Virginia Tech. April 2006.
32. **Rowan SJ,** Metallo-supramolecular *polymers and gels.* Department of Inorganic Chemistry, Wayne State University. March 2006.

33. **Rowan SJ**, Supramolecular Polymerizations: Using Weak Forces to Build Responsive Materials. Department of Chemistry, McMaster University, Canada. March 2006.

34. **Rowan SJ**, Supramolecular Polymerization: The development of dynamic materials. Department of Chemistry and Biochemistry, Georgia Institute of Technology. Feb. 2006.

35. Burke, K.A.; Sivakova, S.; Mather, P.T.; **Rowan, S.J**. Liquid crystalline supramolecular polymers formed via complementary nucleobase pair interactions *Proc. SPIE-Inter. Soc. Optiic. Eng.* 2006, *6135(Liquid Crystal Materials, Devices, and Applications XI)*, 134-141.

36. Polasek K, Hoyen H, Keith M, Kirsch R, and **Tyler D.** Spiral Nerve Cuff Electrodes for anUpper Extremity Neuroprosthesis, 28th Annual International Conference: IEEE Engineering in Medicine and Biology Society, New York City, NY USA, September 2006.

37. **Tyler, D.J.**, "Clinical Progress in Peripheral Nerve Electrodes," Biomedical Engineering Society, Chicago, IL, 12 October 2006.

38. **Tyler, D.J**., "Clinical Implementation of Peripheral Nerve Stimulation," Panther Grand Rounds, University of Pittsburg, 20 Sept 2006.

39. **Tyler, D.J.,** Department of Biomedical Engineering, Univ of Texas, Dallas, 25 June 2006.

40. Schiefer MA, Triolo RJ, **Tyler DJ** (2006) Models of Selective Stimulation with a Flat Interface Nerve Electrode for Standing Neuroprosthetic Systems. 28th International IEEE/EMBS Conference.

41. Schiefer MA, Gustafson KJ, Triolo RJ, Durand DM, **Tyler DJ** "Modeling Selective Stimulation with a FINE for Standing Neuroprosthetics," Case Western Reserve University ShowCASE, Cleveland, OH, 2006.

42. Polasek K, Kirsch R, Hoyen H, Keith M, and **Tyler DJ**. Chronic Human Testing of nerve Cuff Electrodes for an Upper Extremity Neuroprosthesis, presented at Biomedical Graduate Student Symposium, Cleveland OH, May 5, 2006.

43. Zobenica, N, Huynh J, Broniatowksi M**, Tyler DJ**, "Clinical Trials of Laryngotracheal Closure for the Prevention of Aspiration in Dysphagia", BMES Annual Conference, Chicago, IL, October 17, 2006.

44. Suresh S, Smith L, **Tyler DJ,** "Fascicular Anatomy of Upper Extremity Nerves for Neuroprosthesis Development," Biomedical Engineering Society, Chicago, IL, Oct 2006.

45. Broniatowski M, MD, FACS, Grundfest-Broniatowski S, MD, FACS, PhD, Tucker HM, MD, FACS, Green C, **Tyler DJ**, PhD, "Artificial Voice Modulation in the Canine By Recurrent Laryngeal Nerve Stimulation: Electrophysiological Confirmation of Anatomical Data," Combined Otolaryngological Spring Meeting (COSM), American Laryngological Association, Chicago, IL, 2006.

46. Polasek K, Kirsch R, Sams C, Hoyen H, Keith M, and **Tyler DJ,** Implanted Nerve Cuff Electrodes for Arm Function in High Tetraplegia, presented at American Paraplegia Society Annual Conference, Las Vegas, NV USA, September 5-7, 2006.

47. Polasek K, Kirsch R, Hoyen H, Keith M, and **Tyler DJ**. Chronic Human Testing of Nerve Cuff Electrodes for Neuroprostheses, presented at NIH Neural Interfaces Workshop, Bethesda MD, August 21-23, 2006.

48. Zobenica N, Huynh J, Broniatowksi M, **Tyler DJ**, "Clinical Trials of Laryngotracheal Closure for the Prevention of Aspiration in Dysphagia", NIH Neural Interfaces Conference, Bethesda, MD, August 28, 2006.

49. Schiefer MA, Triolo RJ, **Tyler DJ** (2006) Selectively Stimulating the Human Femoral Nerve with a Flat Interface Nerve Electrode. 37th Annual NIH Neural Prosthesis Workshop.

50. Polasek K, Kirsch R, Hoyen H, Keith M, and **Tyler DJ**. Chronic Human Testing of Nerve Cuff Electrodes for an Upper Extremity Neuroprosthesis, presented at Neural Engineering Research Lectures, Cleveland OH, June 2, 2006.

51. Zobenica N, Huynh J, Broniatowksi M, **Tyler DJ**, "Clinical Trials of Laryngotracheal Closure for the Prevention of Aspiration in Dysphagia", Neural Engineering and Rehabilitation Lectures, Cleveland, OH, June 6, 2006.

52. Schiefer MA, Triolo RJ, **Tyler DJ** (2006) Models of Selective Stimulation with a Flat Interface Nerve Electrode for Standing Neuroprosthetic Systems. Neural Engineering and Rehabilitation Lectures.

53. Schiefer MA, Triolo RJ, **Tyler DJ** (2006) Models of Selective Stimulation with a Flat Interface Nerve Electrode for Standing Neuroprosthetic Systems. 29th Annual Biomedical Graduate Student Symposium.

54. **Tyler** DJ**, Weder** C, **Rowan** SJ, and **Capadona JR**. Stimulus-responsive, Mechanically-dynamic Nanocomposite for Cortical Electrodes. 2006 Materials Research Society Spring Meeting. San Francisco, CA. 2006.

55. **Weder** C, Polymer Chameleons: Materials with Built-In Deformation and Temperature Sensors, NASA Glenn Research Center; November 29, 2006; Cleveland, OH.

56. **Weder** C, Metallosupramolecular Conjugated Polymers, ACS 2006 Fall Meeting; September 10 – 14, 2006; San Francisco, CA.

57. **Weder** C, New Polymers with Tamper-Evidencing and Time-Temperature Sensing Capabilities, Procter and Gamble Co., August 23, 2006; Cincinnati, OH.

58. **Weder** C, Supramolecular Metallopolymers, Chulalongkorn University, May 16, 2006; Bangkok, Thailand.

59. **Weder** C, Functional Polymer Design: Creating Materials with Tailored Opto/Electronic Properties, Montanuniversität Leoben, May 2, 2006; Leoben, Austria.

60. **Weder** C, New Packaging Materials with Tamper-Evidencing and Time-Temperature Sensing Capabilities, Honeycomb Internet Presentation, April 10, 2006.

61. **Weder** C, Self-Assessing Photoluminescent Polyurethanes and other Polymer Chameleons, Bayer MaterialScience, March 1, 2006; Pittsburgh, PA.

62. **Weder** C, Functional Polymer Design: Creating Materials with Tailored Opto/Electronic Properties, Wright State University, February 3, 2006; Dayton, OH.

63. **Weder** C, Polymer Chameleons: Materials with Built-In Deformation and Temperature Sensors, Alcoa; February 1, 2006; Pittsburgh, PA.

64. Cong P, Olszens K, **Young DJ,** and Ko WH, Implantable Blood Pressure Monitoring of Small Animal for Advanced Biological Research, *the 13th International Conference on Solid-State Sensors, Actuators and Microsystems*, Seoul, Korea, June 2006, pp. 2002-2005.

65. Keesara V, Hess A, and **Zorman CA,** "Process Development and Evaluation of Polynorbornene as a Structural Material in Multilayered Flexible Devices" presented at *Research ShowCase 2006*, Case Western Reserve University, Cleveland, Ohio, April 5-6, 2006.

2 - Publications Published or Accepted for Publication

1. Haghpanah S, **Bogie KM**, Banks PG, Wang X, Ho CH. *Reliability of electronic vs. manual wound measurement methods.* Arch Phys Med Rehabil. 87(10): 1396-402, 2006.

2. Wang X, Sun J, **Bogie KM**. *Spatial-temporal data mining: LASR- A new procedure.* IMS Lecture Notes – Monograph Series 50, Recent Developments in Nonparametric Inference and Probability: Festschrift for Michael Woodroofe, (50): 213-31, 2006.

3. **Bogie KM**, Wang X, Triolo RJ. Long-term prevention of pressure ulcers in high-risk patients: a single case study of the use of gluteal neuromuscular electric stimulation. Arch Phys Med Rehabil. 87(4):585-91, 2006 Apr.

4. Petrie TA, **Capadona JR**, Reyes CD, Garcia AJ. Integrin specificity and enhanced cellular activities associated with surfaces presenting a recombinant fibronectin fragment compared to RGD supports. Biomaterials. 2006 Nov;27(31):5459-70. Epub 2006 Jul 18.

5. **Mohseni P**, & Najafi M., "A 1-MHz, 5-Kb/s wireless command receiver for electronic site selection in multichannel neural biopotential recording," in Proc. 28th Annu. Int. IEEE Eng. Med. Biol. Conf. (EMBC'06), pp. 6241-6244, New York City, NY, August 30-September 3, 2006.

6. Knapton D, Burnworth M, **Rowan SJ**, Weder C. Fluorescent Organometallic Sensors for the Detection of Chemical-Warfare-Agent Mimics. Angew Chem Int Ed Engl. 2006 Jul 28; [Epub ahead of print].

7. Sivakova S, Wu J, Campo CJ, Mather PT, **Rowan SJ.** *Liquid-Crystalline Supramolecular Polymers Formed through Complementary Nucleobase-Pair Interactions.* Chemistry. 2006 Jan;12(2):446-456. PMID: 16240319 [PubMed - as supplied by publisher].

8. Yang YS, Koontz AM, **Triolo RJ,** Mercer JL, Boninger ML. Surface electromyography activity of trunk muscles during wheelchair propulsion.Clin Biomech (Bristol, Avon). 2006 Dec;21(10):1032-1041. Epub 2006 Sep 18. PMID: 16979271 [PubMed - as supplied by publisher]

9. Heilman BP, Audu ML, Kirsch RF, **Triolo RJ**. Selection of an optimal muscle set for a 16-channel standing neuroprosthesis using a human musculoskeletal model.J Rehabil Res Dev. 2006 Mar-Apr;43(2):273-86. PMID.

10. Wilkenfeld AJ, Audu ML, **Triolo RJ.** Feasibility of functional electrical stimulation for control of seated posture after spinal cord injury: A simulation study.J Rehabil Res Dev. 2006 Mar-Apr;43(2):139-52. PMID: 16847781.

11. Audu ML, Kirsch RF, **Triolo RJ**. Experimental verification of a computational technique for determining ground reactions in human bipedal stance.J Biomech. 2006 Jun 21; [Epub ahead of print] PMID: 16797023.

12. Bogie KM, Wang X, **Triolo RJ.** Long-term prevention of pressure ulcers in high-risk patients: a single case study of the use of gluteal neuromuscular electric stimulation. Arch Phys Med Rehabil. 2006 Apr;87(4):585-91. PMID: 16571402.

13. Polasek T, Hoyen H, Keith M, **Tyler DJ**, "Nerve Thresholds and Selective Activation in the Human with the Spiral Nerve Cuff Electrode," in press, *IEEE Trans Neural Eng and Rehab*.

14. Broniatowski M, Grundfest-Broniatowski S, Tucker H, **Tyler DJ**, "Artificial Voice Modulation in the Canine by Recurrent Laryngeal Nerve Stimulation: Electrophysiological Confirmation of Anatomical Data," in press, *Annals of Otology, Rhinology, and Laryngology*.

15. Greiner A.; **Weder C.**; Light-Emitting Diodes; In: *Concise Encyclopedia of Polymer Science and Technology*; 2nd Edition; Kroschwitz, J.I. Ed.; Wiley-Interscience, New York, In Press.

16. Steiger, D.; **Weder, C.;** Polarized Light-Emitting Diodes; In: *Organic Light-Emitting Diodes*; Li, Z.H.; Meng, H. Eds.; Marcel Dekker, In press.

17. Butter JY, Crenshaw BR, **Weder C**, Hecht B. Single-molecule spectroscopy of uniaxially oriented terrylene in polyethylene. Chem. Phys. Chem. 2006 Jan 16;7(1):261-5.

18. Butter JY, Crenshaw BR, **Weder C**, Hecht B. Absorption and Fluorescence of Single Molecules; J. Chem. Phys. In Press.

19. Knapton D, Rowan SJ **Weder C.** Synthesis and Properties of Metallo-Supramolecular Poly(*p*-xylylene)s; Macromolecules **2006**, 39, 4069-4075.

20. Knapton, D.; Rowan, S.J.; **Weder, C.;** Synthesis and Properties of Metallo-Supramolecular Poly(*p*-phenylene ethynylene)s; *Macromolecules* **2006**, *39*, 651-657.

21. Kinami, M.; Crenshaw, B.; **Weder, C.;** Polyesters with Built-In Deformation and Threshold Temperature Sensors; *Chem. Mater.* **2006**, *18*, 946-955. **Multi-Issue Cover Picture**.

22. **Weder, C.** Organometallic Conjugated Polymer Networks; *J. Inorg. Organomet. Polym. Mat.* **2006**, *16*, 1-13. **Invited Feature Article**.

23. **V.V. Keesara**, D.M. Durand, and **C.A. Zorman**, "Fabrication and Characterization of Flexible, Microfabricated Neural Electrode Arrays Made From Liquid Crystal Polymer and

Polynorbornene", *Materials Research Society Symposium Proceedings*, vol. 926E, in press.

3 - Publications Under Review or in Revision

1. **Bogie KM,** Wang X, Fei B, Sun J*. Getting more out of pressure mapping: a new technique for interface pressure analysis* . In revision for submission to Clinical Rehabilitation.
2. **Bogie KM,** Wang X, Fei B, Sun J*. A new technique for real-time interface pressure analysis: Getting more out of large image datasets*. In revision for submission to J Real Time Image proc.
3. van den Berg O, **Capadona JR,** and Weder C. *Preparation of Homogeneous Dispersions of Tunicate Cellulose Whiskers in Organic Solvents, submitted to Biomacromolecules in November 2006.*
4. van den Berg O, Schroeter M, **Capadona JR,** and Weder C. Nanocomposites based on cellulose whiskers and (semi)conducting conjugated polymers, , *submitted to Macromolecules in December 2006.*
5. Wenzel BJ, Boggs JW, Gustafson KJ, **Creasey GH**, Grill WM. Detection of neurogenic detrusor contractions from the activity of the external anal sphincter in cat and human. Neurourol Urodyn. 2006;25(2):140-7. PMID: 16224800.
6. Bhadra N, Grunewald V, **Creasey GH**, Mortimer JT.Selective activation of the sacral anterior roots for induction of bladder voiding. Neurourol Urodyn. 2006;25(2):185-93. PMID: 16224799.
7. Pan HQ, Kerns JM, Lin DL, Liu S, Esparza N, and **Damaser MS** (2007) Increased Duration of Simulated Childbirth Injuries Results in Increased Time to Recovery. *American Journal of Physiology: Regulatory, Integrative, and Comparative Physiology.* In Press.
8. Woo LL, Hijaz A, Kuang M, Penn MS , **Damaser MS**, Rackley RR (2007) Overexpression of Stem Cell-Homing Cytokines in Rat Pelvic Organs Following Vaginal Distension. *Journal of Urology.* In Press.
9. Kim R, Kerns JM, Liu S, Nagel T, Zaszczurynski P, Lin DL, and **Damaser MS** (2007) Striated Muscle and Nerve Fascicle Distribution of the Female Rat Urethra. *Anatomical Record.* In Press. ***Cover Article.***
10. Ahmed Y, Lin DL, Ferguson C, Esparza N, **Damaser MS.** Effect of estrogen on urethral function and nerve regeneration following pudendal nerve crush in the female rat. J Urol. 2006 May;175(5):1948-52. PMID: 16600804.
11. Lemack GE, Siegel S, Comiter C, **Damaser MS**, Kobashi K, Payne C, Rodriguez L, Wright EJ. Highlights from the combined Society of Urodynamics and Female Urology and International Society of Pelvic Neuromodulation annual meeting. J Urol. 2006 May;175(5):1852-6. No abstract available. PMID: 16600778.

12. Reichler, I.M., **Damaser MS**, Lin, DL, Kull S, Hubler M, and Arnold S (2007) Effect of ovariectomy and subsequent treatment with GnRH on the continence mechanism in the rat. *American Journal of Physiology.* Submitted.

13. Daneshgari, F., Liu G, Li M, Lin DL, Li T, and **Damaser MS** (2007) Urinary Incontinence, Bladder Dysfunction And Pelvic Organ Prolapse In Lysyl Oxidse Like-1 (LOXL1) Mutant Mice: A Complete Animal Model For Female Pelvic Floor Disorders? *American Journal of Gynecology.* Submitted.

14. Krysl, P., **Damaser M**, Chukkapalli G, Majumdar A , Choi DJ, Trivedi A, Warfied SK, Hoyte L (2007) Computational Model of Levator Ani Muscle Stretch during Natural Birth. *Journal of Biomechanics.* Submitted.

15. Kim, J.-H., Saffore L, Huang X, Bena J, **Damaser MS**, and Daneshgari F (2007) Diabetes slows the recovery from urinary incontinence due to simulated childbirth in female rats. *American Journal of Physiology.* Submitted.

16. Bhadra N, Gustafson KJ, Bhadra N, **Kilgore KL**. *High Frequency Alternating Current Block of the Feline Pudendal Nerve*, in revision, J Neural Engineering.

17. Heilman BP, Audu ML, **Kirsch RF**, Triolo RJ. Selection of an optimal muscle set for a 16-channel standing neuroprosthesis using a human musculoskeletal model.J Rehabil Res Dev. 2006 Mar-Apr;43(2):273-86. PMID: 16847793.

18. Audu ML, **Kirsch RF**, Triolo RJ. Experimental verification of a computational technique for determining ground reactions in human bipedal stance. J Biomech. 2006 Jun 21; [Epub ahead of print] PMID: 16797023.

19. Kumar AN, Han YH, **Kirsch RF**, Dell'Osso LF, King WM, Leigh RJ.Tests of models for saccade-vergence interaction using novel stimulus conditions. Biol Cybern. 2006 Aug;95(2):143-57. Epub 2006 May 13. PMID: 16699782.

20. Tatro JM, Taki N, Islam AS, Goldberg VM, **Rimnac CM**, Doerschuk CM, Stewart MC, Greenfield EM. The balance between endotoxin accumulation and clearance during particle-induced osteolysis in murine calvaria.J Orthop Res. 2006 Nov 14; [Epub ahead of print] PMID: 17106883.

21. Kurtz SM, Hozack WJ, Purtill JJ, Marcolongo M, Kraay MJ, Goldberg VM, Sharkey PF, Parvizi J, **Rimnac CM,** Edidin AA.2006 OTTO AUFRANC AWARD PAPER: Significance of In Vivo Degradation for Polyethylene in Total Hip Arthroplasty. Clin Orthop Relat Res. 2006 Oct 5.

22. Akhavan S, Matthiesen MM, Schulte L, Penoyar T, Kraay MJ, **Rimnac CM**, Goldberg VM. Clinical and histologic results related to a low-modulus composite total hip replacement stem.J Bone Joint Surg Am. 2006 Jun;88(6):1308-14. PMID: 16757765.

23. Varadarajan R, **Rimnac CM.** Compliance calibration for fatigue crack propagation testing of ultra high molecular weight polyethylene.Biomaterials. 2006 Sep;27(27):4693-7. Epub 2006 Jun 5. PMID: 16750266 .

24. Gencur SJ, **Rimnac CM**, Kurtz SM. Fatigue crack propagation resistance of virgin and highly crosslinked, thermally treated ultra-high molecular weight polyethylene.Biomaterials. 2006 Mar;27(8):1550-7. Epub 2005 Nov 21. PMID: 16303175.

25. Kurtz SM, Mazzucco D, **Rimnac CM**, Schroeder D. Anisotropy and oxidative resistance of highly crosslinked UHMWPE after deformation processing by solid-state ram extrusion. Biomaterials. 2006 Jan;27(1):24-34. PMID: 16085308.

26. Weng W, Beck JB, Jamieson AM, **Rowan SJ.** Understanding the mechanism of gelation and stimuli-responsive nature of a class of metallo-supramolecular gels. J Am Chem Soc. 2006 Sep 6;128(35):11663-72.

27. Gustafson K, Neville J, Syed I, Davis JA, **Triolo RJ**. *Fascicular Anatomy of the Human Femoral Nerve: Implications for Neural Prostheses Utilizing Nerve Cuff Electrodes*, Clinical Anatomy - (submitted, September 2005).

28. Schiefer MA, Triolo RJ, **Tyler DJ**, "A Model of Selective Activation of the Femoral Nerve with a Flat Interface Nerve Electrode for a Lower Extremity Neuroprosthesis," submitted, *IEEE Trans Neural Sys Rehab Eng*.

29. Suster M, Guo J, Chaimanonart N, Ko WH, and **Young DJ**, *A High-Performance MEMS Capacitive Strain Sensing System*, submitted to IEEE Journal of Microelectromechanical Systems.

30. Chaimanonart N, Suster MA, Ko WH, and **Young DJ**, *Two-Channel Data Telemetry with Remote RF Powering for High-Performance Wireless MEMS Strain Sensing Applications*, submitted to IEEE Sensors Journal.

31. Zurcher MA, **Young DJ**, Trang T, Megerian CA, Ko WH, *Ossicular Chain Vibration Coupled to MicroElectroMechanical Accelerometer for a Totally Implantable Cochlear Prosthetic Microsystem*, submitted to IEEE Journal of Biomedical Engineering.

32. Kunzelman, J.; Crenshaw, B.; Kinami, M.; **Weder, C**.; Supramolecular Aggregate Formation of Sensor Dyes in Polymer Matrices: New Mechanochromic and Thermochromic Materials; *Angew. Chem.* Submitted.

33. Crenshaw, B.; **Weder, C.**; Self-Assessing Photoluminescent Polyurethanes; *Macromolecules* Submitted.

34. Hess AE, Dunning J, Tyler DJ and **Zorman CA**, "A Polynorbornene-Based Microelectrode Array for Neural Interfacing" submitted to Transducers 2007, Lyon France, June 2007.

4 - Sponsored Conferences and Workshops

1. **Bogie, KM** – **Scientific Chair and Course Director**, *Evidence-based practice in wound care.* Cleveland, OH, September, 2006. Also includes presentation on *Wound care: Novel programs for clinical care and early intervention.*

2. ***Neural Prosthesis Seminar Series***

   The APT Center jointly hosted nine city-wide Neural Prosthesis Seminars. The program is a public educational forum on topics related to rehabilitation. Speakers are active in the national/international community of rehabilitation research and development of assistive technologies. Speakers invited to Cleveland to participate are provided with an excellent opportunity to experience our research environment, which often results in research collaborations. A complete list of the series speakers is below:

   - January 20, 2006 – Michelle Basso, PT, EdD. – "Designing Therapeutic Interventions to Regulate Remote Segmental Plasticity Following Spinal Cord Injury."

   - February 17, 2006 – Shuvo Roy, Ph.D. – "Clinical BioMEMS: Moving Beyond Widgets."

   - March 17, 2006 - Zelma Kiss, Ph.D. – "Therapeutic Brain Stiumlation - Applications, Mechanisms, and Potential."

   - April 28, 2006 – William C. de Groat, Ph.D. –"Modulation of voiding by electrical stimulation of peripheral or central neural pathways."

   - May 19, 2006 – Milos Popovic, Ph.D. – "Toronto FES Program: 1) FES-assisted Standing and 2) FES Therapy for Improving Voluntary Grasp."

   - September 22, 2006 – Richard F. Weir, Ph.D. & Stuart D. Harshbarger, Ph.D. Weir: "A True Replacement for the Natural Hand and Arm – An Elusive Dream?" Harshbarger "DARPA Revolutionizing Prosthetics 2009 Program Overview: Progress & Challenges."

   - October 20, 2006 – Michel Lemay, Ph.D. - "Motor Recovery and Intraspinal Microstimulation in Chronic Spinal Animals Following Neurotrophins/motor Training Treatments."

   - November 17, 2006 – Mohamad Sawan, Ph.D. - "Implantable Smart Medical Devices Dedicated to Multichannel Sensing and Electrical Stimulation."

   - December 8, 2006 – Eberhard E. Fetz, Ph.D. - "Volitional Control of Neural Activity and Recurrent Brain-computer Interfaces."

5 - Transferred (Commercialized/Patented Technology)

- **Invention Disclosures Filed**
  - **Triolo, Ronald J. –** Permanent Magnet Magnetorheolgical (MR) Fluid Knee Brake Orthosis, 10/3/06.
  - **Triolo, Ronald J. –** Controllable Joint Locking Mechanism for a Knee Orthosis, 10/3/06.
- **Patents Filed**
  None

6 - Community Activities

1. **Case Western Reserve University Research Showcase –** April 2006.
2. **VISN 10 Research Newsletter** – Summer 2006. APT Center Ribbon Cutting.
3. **Neural Engineering Research Lectures (NERL) Exhibit –** June 2006.
4. **VA Research Currents –** September 2006. APT Center Ribbon Cutting.
5. **Wireless Exhibit –** September 2006.
6. **Wound Care Conference –** September 2006.
7. **Press Release –** October 2006. Prosthetics Needs Assessment.
8. **Press Release –** October 2006. APT Center Awarded Three New Grants.
9. **VA Exhibit -** December 2006. APT Center Prosthetic Needs Assessment and Device Display (Figure 20).
10. **Bogie, KM** - Judge, Living Systems Projects & Materials Projects, Internet Science and Technology Fair.
11. **Bogie, KM** - Judge, Science Fair, Shaker Heights Middle School.
12. **Triolo, RJ** – Board Member, **RePlay *for Kids*.**

    RePlay for *Kids* is a 501(c)(3) tax-exempt non-profit organization of volunteers who repair and adapt toys and assistive devices for children with disabilities in Northeast Ohio. **RePlay *for Kids*** provides these services at no cost for non-profit organizations that provide medical, educational, or recreational resources for children with disabilities in the Northeast Ohio area. Most of these organizations have limited resources and often cannot afford to replace devices that have broken, and do not

Figure 20: VA Exhibit December 2006.

have the technical knowledge or time available to repair the devices. **RePlay *for Kids*** can provide these services, therefore increasing the number of functioning toys and assistive devices available for children with disabilities.

13. **Tyler, DJ** – School BME Visitor Committee.
14. **Tyler, DJ** – Chair BME Subcommittee for Case High School Scholarship Committee.
15. **Zorman, C** - *Program Committee*: SPIE Photonics West: MOEMS-MEMS 2007.

7 - Other information Dissemination Activities

Information Dissemination			
Element	**Target**	**Purpose**	**Progress**
Annual report	Lay and consumer groups	Public relations and general education purposes	The VA annual report is completed and will be reformatted and revised for general educational purposes.
Investigator Minutes	Technical professionals and Center stakeholders	Update all Center Investigators and affiliates on program progress	Minutes are sent within one week of the meeting.
Center Website	Consumer & clinical or technical professionals	Information clearinghouse for all Center related activities	The Center Website is online.
Private list-serves and bulletin boards	Center Investigators and staff	Internal communication for ongoing project level management	We have established four list-serves. • The entire center • The investigators • The staff • The students
E-Newsletter	Stakeholders and Collaborators	Special Announcements and Requests	4 E-Newsletters were issued in 2006.
Professional society meetings	Rehabilitation & technical professionals	Transfer knowledge regarding Center discoveries, methods or products and solicit professional input and external advice	We presented at: Research Showcase April 5th and 6th, NERL Day June 2nd, Wireless Applications Conference September 14th, Wound Care Conference September 15th and 16th.
Special Issue of *JRRD*	Rehabilitation professionals, consumers	Contribute to scientific foundation of rehabilitation science and engineering.	A draft of a guest editorial is underway.

E. RESEARCH COLLABORATIONS

6. Summary of Clinical Interface –

The APT Center is fundamentally a technology center that designs, develops, and produces enabling technologies that are clinically relevant. We consciously strive to share our technology within and outside of the VA system. Examples of Clinical Interfaces include:

- Veteran population affected – The new and emerging technologies we are developing may potentially be used to positively affect a significant proportion of the veteran population. Veterans with sensory deficits or motor impairment as a result of spinal cord injury (SCI), stroke, traumatic brain injury or other central nervous system damage or disease would benefit from clinical application of our technology. Veterans with limb loss would benefit from better mechanical and cybernetic interfacing of advanced prostheses. Veterans with impairment of special senses such as hearing and vision may benefit from further standardization of technology platforms.

- Active clinical participation in our leadership team – Graham Creasey, M.D., serves as our Medical Director and is a member of the leadership team which sets the direction and operational goals for the Center. Chester Ho, M.D.; and John Stahl, M.D.; are clinical advisors to the center.
- Multi-disciplinary research teams – Most of our research teams are lead by both a clinician and engineer. In addition to these team members, all teams have technical staff assigned.
- Work environment – Several of our laboratories are located immediately adjacent to clinical areas, allowing immediate contact between clinicians and engineers for discussion of issues such as needs definition, development and testing of prototypes, and definitive solution dissemination.
- Clinical Needs Assessment – The clinical needs assessment actively involves clinicians and consumers in identifying and prioritizing needs which then shape our research focus. These workshops also include leaders in the field of biotechnology which allow for a broader market perspective of the clinical applications.
- Investigator Meetings - To facilitate ongoing interactions between clinicians and affiliated APT Center scientists, we have established a quarterly Investigators Meeting that brings faculty and physicians together to discuss potential new projects and progress on existing projects. Part of each meeting is dedicated to a tutorial given by a clinician on a topic of particular relevance to the disabled veteran. Areas covered have included clinical issues related to organ, cavity or tissue pressure, prosthetics and orthotics, and telemedicine.
- Sponsored Conferences – We are in the process of organizing special sessions at clinical conferences (American Paraplegia Society, etc.) to identify barriers to deployment of existing technologies and acceptance by the medical community.

- LSCDVAMC – A center research staff member is a participant each week in the spinal cord injury rounds, and regular presentations are made to the clinical staff.
- Neural Prosthesis Seminar Series – This seminar series discussed in **D4: Sponsored Conferences and Workshops,** has both technical and clinical speakers with an opportunity for networking immediately following the event.
- Platform Advisory Board – An internal team consisting of investigators, senior engineers, and clinicians that triages potential solutions. The team allows for ongoing open discussion between those who are familiar with clinical needs and those who are familiar with capabilities of the technology.

7. Active Collaborations

We have engaged in 2 active collaborations during the reporting period and are in the process of pursuing other collaborative projects that will advance our mission and that of the Rehabilitation RR&D Service. In this report we focus on new and developing collaborations, rather than the ongoing pre-existing projects already mentioned.

- **New Collaborations**
  - **NDI Medical (Cleveland OH):** As previously mentioned in section **A2: Stated Goals and Objectives Achieved**, we are actively collaborating with NDI Medical to develop the clinical programming platform for a new 8-channel multi-purpose implantable pulse generator (IPG). The clinical interface will allow the rapid specification and modification of stimulation patterns to be delivered by the IPG so that its operation can be efficiently customized for the unique needs of each implant recipient by a clinician. The programmer is being designed to our specifications by NDI and will reside on a handheld computer (i.e., Palm) and communicate wirelessly to the IPG. This clinical interface represents a critical component of a new system that will form a technical platform for clinical trials of neuroprostheses for hand grasp, standing, stepping and other motor or sensory dysfunctions resulting from traumatic brain or spinal cord injury, stroke or multiple sclerosis.
  - **Vanderbilt University (Nashville, TN):** The central hypothesis of this proposal is that synchronization of stimulation of the posterior cricoarytenoid muscle for vocal fold abduction with the respiratory cycles will improve the performance of neuroprostheses for treating chronic fold medialization. The hypothesis of the sub-contract is that a flat interface nerve electrode (FINE) electrode can record the ENG activity of the phrenic nerve and adequately predict respiration. This will be the primary control source for the full system that is the subject of the studies in the parent proposal.

- **University of Pittsburgh (D. Weber, Ph.D.):** The purpose of this collaboration is to study the afferent activity associated with limb movement and attempt to reconstruct the motion generating in order to derive control signals for prostheses and better understand the sensory system for interventions dealing with pain or sensory loss. The APT Center is developing the basic infrastructure and technical resources required to record sensory neuronal activity from primary afferent neurons during acute experiments with anesthetized cats that will be performed at the University of Pittsburgh. While microelectrodes record single unit activity from neurons in the dorsal root ganglion (DRG). Compound electroneurogram (ENG) signals will be recorded from a multicontact spinal nerve cuff electrode designed and produced by the APT Center located approximately 2 cm distal to the DRG. Spike-triggered averaging will then isolate single-unit activity in the nerve cuff ENG. The APT Center spiral nerve cuffs have 5 pairs of contacts equally spaced along their length with the central (3rd) and outermost electrodes (1st and 5th) connected together to serve as the common reference for differential recording from the active (2nd and 4th) contacts. The advantage of this design is that the distance (D) between the active electrodes can be precisely measured or specified during fabrication, which allows nerve conduction velocity (CV) to be calculated based on the time delays (Δt) between the occur between the occurrences of negative peaks in the action potentials recorded on the active contacts. The CV measurements for each DRG afferent will be used to determine the afferent's receptor classification (e.g. group I, group II). Electrodes of this type are not available commercially and represent platform technologies that the APT Center can customize for specific research and clinical applications. An APT Center fabricated spiral nerve cuff for this application was implanted on the sciatic nerve of a 3.7 kg cat to record ENG signals during an acute experiment.

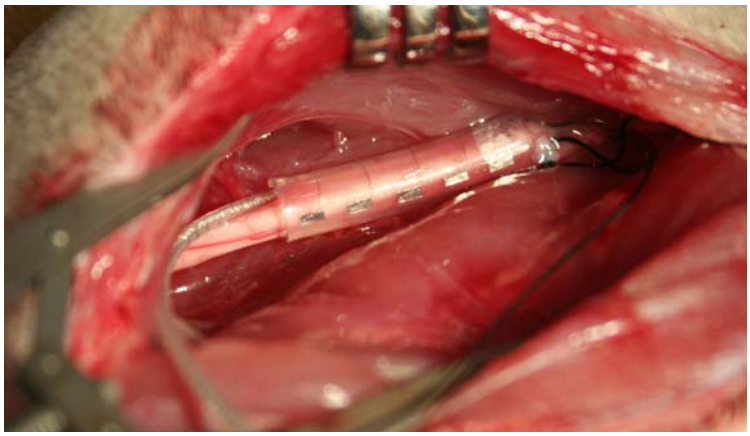

Figure 21: 5-Pole spiral cuff wrapped sciatic nerve.

ENG signals were very clean and allowed accurate estimates of nerve conduction velocity. **Figure 22** shows an example of ENG signals recorded from the distal and proximal electrodes of the cuff (contacts 4 and 2, respectively).

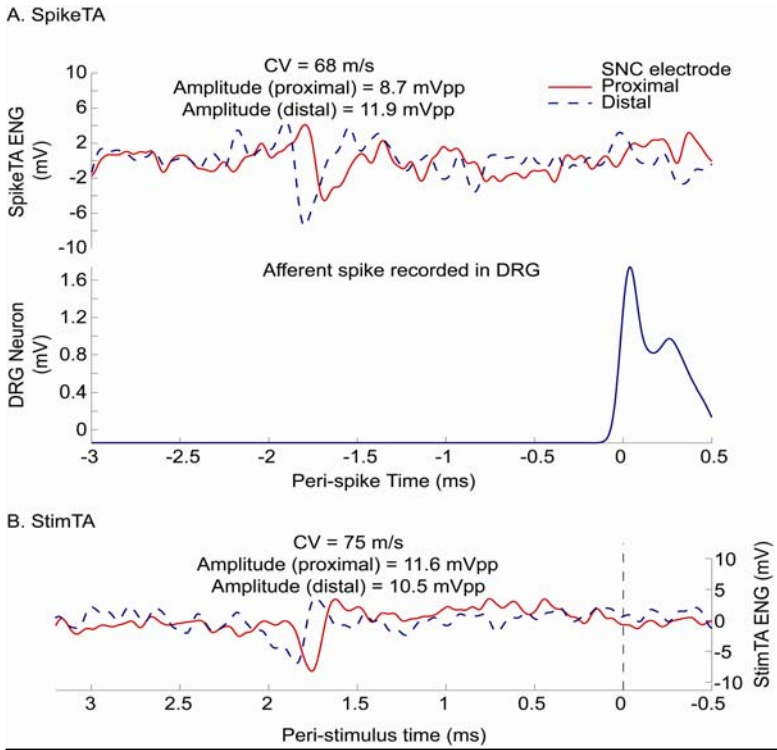

Figure 22: ENG and single-unit afferent recording data. (A) ENG signals recorded from the distal (red) and proximal (blue) poles of the nerve cuff. Also shown, single-unit action potential recorded in the DRG. (B) Action potential propagating anti-dromically through the cuff. Microstimulation in the DRG was used to elicit the antidromic spike.

- **Collaborative Projects Under Development**
  - **Pittsburgh VA Research Center of Excellence, Human Engineering Research Laboratories (Pittsburgh, PA):** Discussions with Richard Simpson, PhD. regarding potential collaborations in the areas of control and remote sensors, command conditioning and control strategies for wheelchair applications are underway.
  - **VA Center for Limb Loss Prevention and Prosthetic Engineering (Seattle, WA):** Discussions with Glenn Klute, PhD. Regarding a potential needs assessment specific to prosthetic needs of diabetics is occurring.